YAMAHA

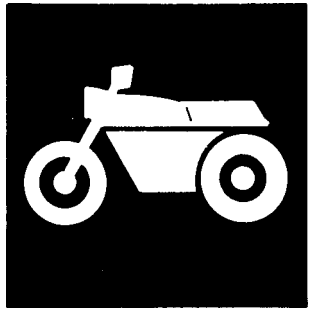

PARTS CATALOGUE

PW80 (4BCC) EUROPE,JAPAN

2A4BC–300E1

YAMAHA GENUINE Parts & Accessories

A2

PW80
PARTS CATALOGUE
©2001 by Yamaha Motor Co., Ltd.
1st Edition, May 2001
All rights reserved.
Any reprinting or unauthorized use
without the written permission of
Yamaha Motor Co., Ltd.
is expressly prohibited.

A3

A4

FOREWORD

This Parts Catalogue is related to the parts for the model(s) in the below frame. When you are ordering replacement parts, please refer to this Parts Catalogue and quote both part numbers and part names correctly.

PW80(4BCC)

1. Modifications or additions which have been made after issue of the Parts Catalogue will be announced in the Yamaha Parts News.
   It is advisable that you make necessary corrections to the Parts Catalogue according to the Yamaha Parts News.
2. Abbreviations
   The Following abbreviations are used in this Parts Catalogue.
   "UR" Use specified parts number.
   "UN" Use as many as needed.
   "AP" Alternate Parts
   "LM" Local Made (Parts need to be ordered locally)
   "F#" Frame No. (Applicable machine No.)
3. Parts, which are to be supplied in an assembly, are listed with a dot(.) in front of the part name as shown below.
   EXAMPLE
   CARBURETOR ASSY
   .JET, PILOT
   .NOZZLE, MAIN
4. Number of component for assembly
   The numeral appearing to the right of each component part indicates the quantity of parts for each assembly unit.

EXAMPLE

PART NO.	DESCRIPTION	Q'TY	REMARKS
2F5–83310–60	FRONT FLASHER LIGHT ASSY	2	
115–83311–60	.BULB (6V–18W)	1	
1M1–83309–60	.REFLECTOR	1	

5. Applicable colors of graphics are represented in the "REMARKS" as shown below.

PART NO.	DESCRIPTION	Q'TY	REMARKS
2N4–24110–00–X5	.FUEL TANK COMP.	2	MXR
3J1–24240–10	.GRAPHIC, FUEL TANK	1	for MXR

6. Applicable Serial No.

Engine Serial No.

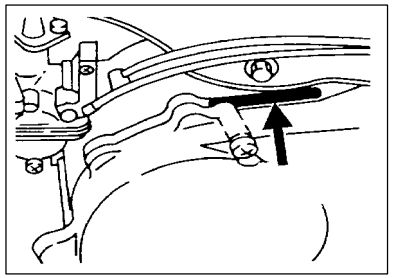

Frame Serial No.

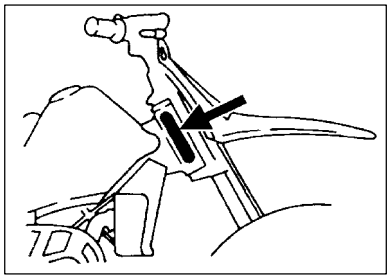

7. Note that the illustrations for reference in funding parts numbers, not to be used for assembling. When assembling, pleas use the applicable service manual.
8. The asterisk (*) before a reference number indicates modification items after the first edition.

MODEL LABEL

(1) A label called “Model Label” is affixed in the location as indicated in (3) below. When using this parts catalogue, please be sure to cross–refer the “model code – production code No.” in the catalogue to the “model code – production code No. “indicated on the Model Label affixed onto the product concemed.

(2) “Model Label”Indication

	a b
○	xxxx – xxx
●	x c

a: Model Type Code
b: Production Code No.
c: Colouring Type

○	4TW1–010
●	A

(3) Model Label Affixing Location

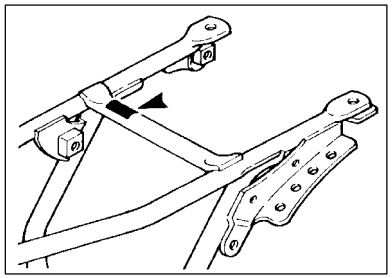

(4) Model Code – Production Code Number of Model Listed in This Parts Catalog

Model Code	Production Code No.	Country (destination)	Model Code	Production Code No.	Country (destination)
4BCC	020	AUSTRIA			
	030	BELGIUM			
	030	NETHERLANDS			
	040	SWITZERLAND			
	050	DENMARK			
	050	FINLAND			
	050	NORWAY			
	050	IRELAND			
	060	SPAIN			
	070	ENGLAND			
	080	GREECE			
	090	JAPAN			
	100	PORTUGAL			
	110	SWEDEN			
	120	S.AFRICA			

(5) Colouring Information

Colouring type code	Colour code	Colour Name	Abbrevi-ation
A	0583	DEEP PURPLISH BLUE SOLID E	DPBSE

FIG. 1 CYLINDER

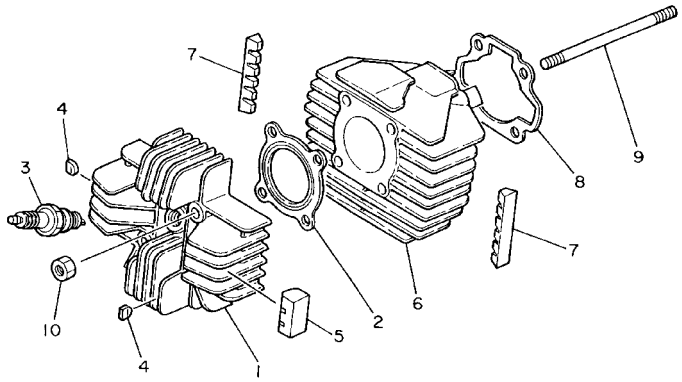

3RV110-1010

REF. NO.	PART NO.	DESCRIPTION	EUR	ZAF	JPN			REMARKS
1	21W–11111–00	HEAD, CYLINDER 1	1	1	1			
2	1W7–11181–00	GASKET, CYLINDER HEAD 1	1	1	1			
3	94701–00198	PLUG, SPARK (NGK BPR6HS)	1	1				
	94703–00198	PLUG, SPARK (NGK BPR6HS)			1			
4	463–11161–01	ABSORBER 1	4	4	4			
5	21W–11162–00	ABSORBER 2	1	1	1			
6	3E5–11311–01	CYLINDER 1	1	1	1			
7	3E5–11162–00	ABSORBER 2	2	2	2			
8	4AW–11351–00	GASKET, CYLINDER	1	1	1			
9	90116–07035	BOLT, STUD	4	4	4			
10	90179–07381	NUT	4	4	4			

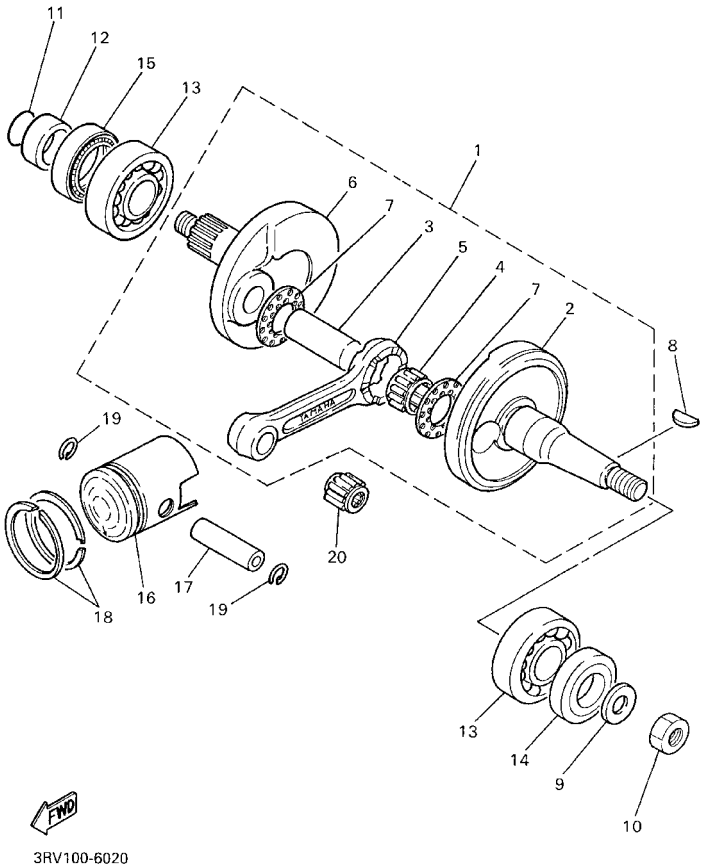

FIG. 2 CRANKSHAFT. PISTON

REF. NO.	PART NO.	DESCRIPTION	EUR	ZAF	JPN			REMARKS
1	1HA–11400–00	CRANKSHAFT ASSY	1	1	1			
2	1W7–11412–00	.CRANK 1	1	1	1			
3	2Y1–11681–00	.PIN, CRANK 1	1	1	1			
4	93310–420F2	.BEARING	1	1	1			
5	1W7–11651–00	.ROD, CONNECTING	1	1	1			
6	1HA–11422–00	.CRANK 2	1	1	1			
7	90209–20159	.WASHER	2	2	2			
8	90280–03017	KEY, WOODRUFF	1	1	1			
9	90201–12535	WASHER, PLATE	1	1	1			
10	95337–12600	NUT	1	1	1			
11	93210–18023	O–RING	1	1	1			
12	90387–20603	COLLAR	1	1	1			
13	93306–20517	BEARING (B6205)	2	2	2			
14	93103–25098	OIL SEAL	1	1	1			
15	93103–32099	OIL SEAL	1	1	1			
16	3E5–11631–00–97	PISTON (STD)	1	1	1			
	3E5–11635–00	PISTON (0.25MM O/S)	1	1	1			AP
	3E5–11636–00	PISTON (0.50MM O/S)	1	1	1			AP
17	527–11633–00	PIN, PISTON	1	1	1			
18	14N–11603–00	PISTON RING SET (STD)	1	1	1			
	14N–11604–00	PISTON RING SET (0.25MM O/S)	1	1	1			AP
	14N–11605–00	PISTON RING SET (0.50MM O/S)	1	1	1			AP
19	93450–13022	CIRCLIP	2	2	2			
20	93310–11268	BEARING	1	1	1			

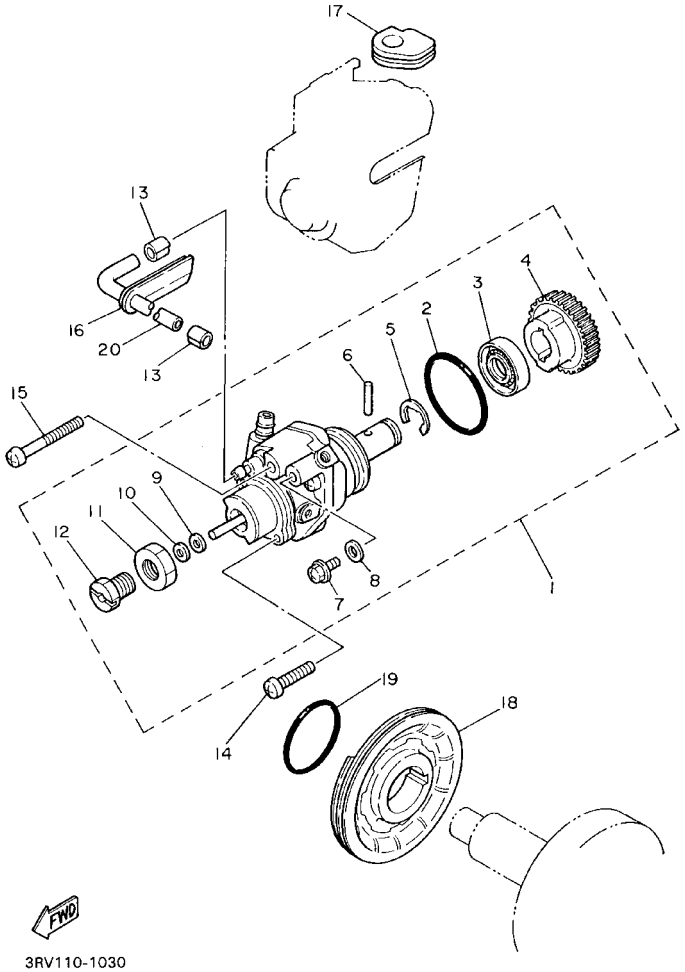

FIG. 3 OIL PUMP

REF. NO.	PART NO.	DESCRIPTION	EUR	ZAF	JPN			REMARKS
1	2T8–13101–00	OIL PUMP ASSY	1	1	1			
2	93210–26240	.O–RING	1	1	1			
3	93101–10001	.OIL SEAL	1	1	1			
4	2T5–13124–00	.GEAR, WORM WHEEL (71T)	1	1	1			
5	93430–07012	.CIRCLIP	1	1	1			
6	93603–14026	.PIN, DOWEL	1	1	1			
7	90149–04135	.SCREW	1	1	1			
8	90430–04004	.GASKET	1	1	1			
9	296–13147–00	.SHIM	1	1	1			
10	384–13138–00	.PLATE, ADJUSTING	1	1	1			
11	90170–10105	.NUT	1	1	1			
12	90401–10029	.BOLT, UNION	1	1	1			
13	90468–02033	CLIP	2	2	2			
14	98507–05020	SCREW, PAN HEAD	1	1	1			
15	98507–05035	SCREW, PAN HEAD	1	1	1			
16	90480–10005	GROMMET	1	1	1			
17	384–13174–00	HOLDER, OIL PIPE	1	1	1			
18	53F–13178–00	GEAR, PUMP DRIVE	1	1	1			
19	93210–29282	O–RING	1	1	1			
20	384–13161–02	PIPE, DELIVERY 1	1	1	1			

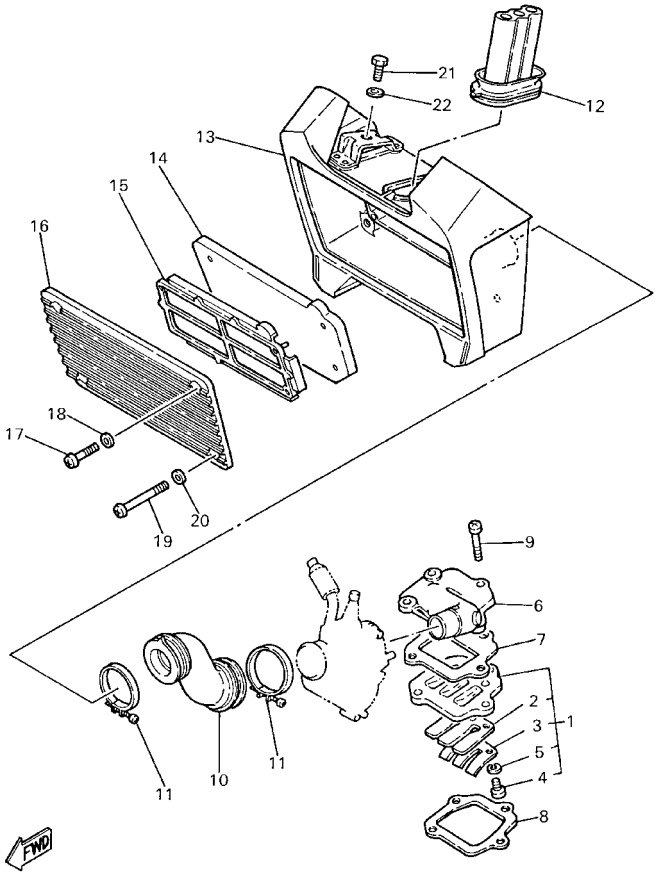

3RV100-4040

FIG. 4 INTAKE

REF. NO.	PART NO.	DESCRIPTION	EUR	ZAF	JPN			REMARKS
1	300–13610–04	REED VALVE ASSY	1	1	1			
2	300–13613–02	.REED, VALVE	1	1	1			
3	300–13616–00	.STOPPER, REED VALVE	1	1	1			
4	98507–03008	.SCREW, PAN HEAD	3	3	3			
5	92907–03100	.WASHER	3	3	3			
6	21W–13555–00	MANIFOLD, INTAKE	1	1	1			
7	300–13622–10	GASKET, VALVE SEAT	1	1	1			
8	300–13621–10	GASKET, VALVE SEAT	1	1	1			
9	98507–06030	SCREW, PAN HEAD	4	4	4			
10	21W–14453–00	JOINT, AIR CLEANER 1	1	1	1			
11	90460–37130	CLAMP, HOSE	2	2	2			
12	5U8–14454–00	JOINT	1	1	1			
13	3RV–W1441–40	AIR CLEANER CASE COMP.	1	1	1			
14	21W–14451–00	ELEMENT, AIR CLEANER	1	1	1			
15	21W–14458–00	GUIDE	1	1	1			
16	21W–14412–00	CAP, CLEANER CASE 1	1	1	1			
17	98507–05025	SCREW, PAN HEAD	2	2	2			
18	92907–05600	WASHER, PLATE	2	2	2			
19	98507–05050	SCREW, PAN HEAD	2	2	2			
20	92907–05600	WASHER, PLATE	2	2	2			
21	97007–08016	BOLT	2	2	2			
22	92907–08600	WASHER, PLATE	2	2	2			

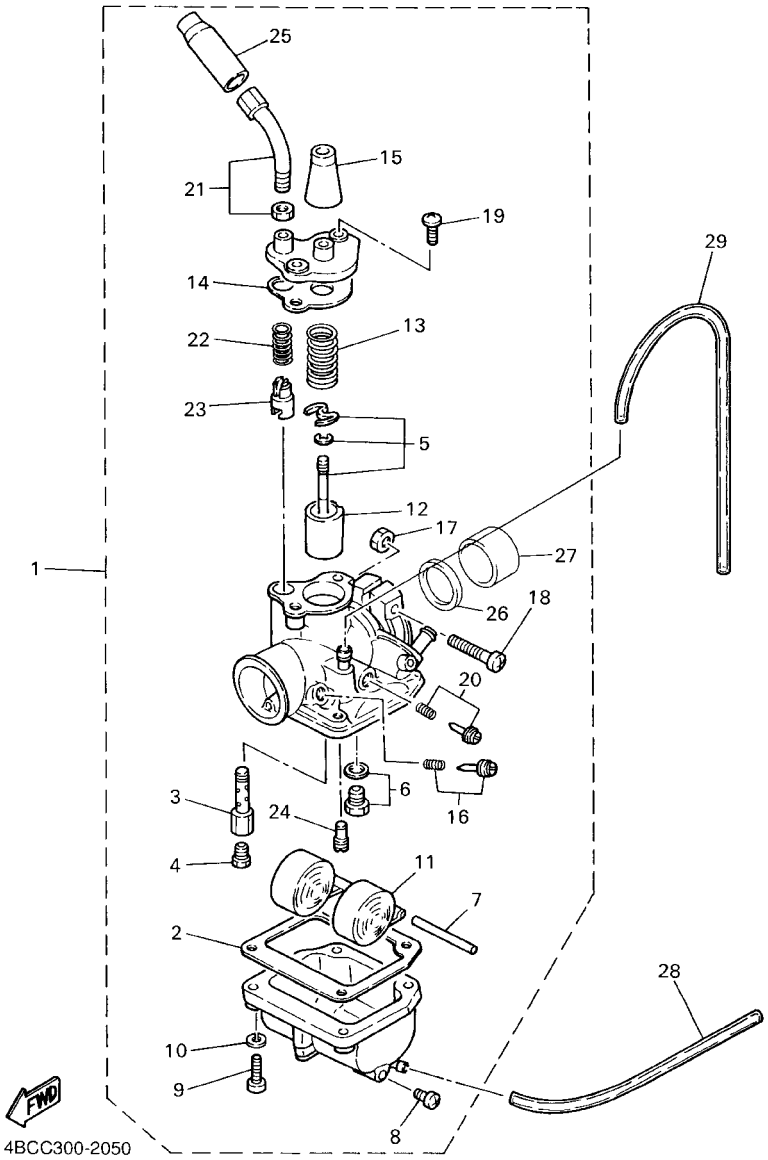

FIG. 5 CARBURETOR

REF. NO.	PART NO.	DESCRIPTION	EUR	ZAF	JPN			REMARKS
1	21W–14101–00	CARBURETOR ASSY 1	1	1	1			
2	296–14184–01	.GASKET, FLOAT CHAMBER	1	1	1			
3	127–14141–14	.NOZZLE, MAIN	1	1	1			
4	127–14143–25	.JET, MAIN (#125)	1	1	1			STD
	127–14143–24	.JET, MAIN (#120)	1	1	1			UR
	127–14143–26	.JET, MAIN (#130)	1	1	1			UR
5	21W–1490J–00	.NEEDLE SET	1	1	1			
6	21W–14107–12	.NEEDLE VALVE SET	1	1	1			
7	127–14186–00	.PIN, FLOAT	1	1	1			
8	12R–14191–00	.PLUG, DRAIN	1	1	1			
9	98502–04018	.SCREW, PAN HEAD	4	4	4			
10	92902–04100	.WASHER, SPRING	4	4	4			
11	2E9–14185–00	.FLOAT	1	1	1			
12	296–14112–25	.VALVE, THROTTLE 1	1	1	1			
13	296–14131–00	.SPRING, THROTTLE VALVE	1	1	1			
14	296–14198–01	.GASKET	1	1	1			
15	307–14169–10	.CAP	1	1	1			
16	12G–14104–00	.AIR SCREW SET	1	1	1			
17	98802–05100	.NUT	1	1	1			
18	98502–05030	.SCREW, PAN HEAD	1	1	1			
19	98502–04010	.SCREW, PAN HEAD	2	2	2			
20	12G–14103–00	.THROTTLE SCREW SET	1	1	1			
21	21W–14503–00	.ADJUST SCREW SET	1	1	1			
22	127–14135–00	.SPRING, PLUNGER	1	1	1			
23	127–14171–00	.PLUNGER, STARTER	1	1	1			
24	193–14142–15	.JET, PILOT (# 15)	1	1	1			
25	1R0–14169–00	.CAP	1	1	1			

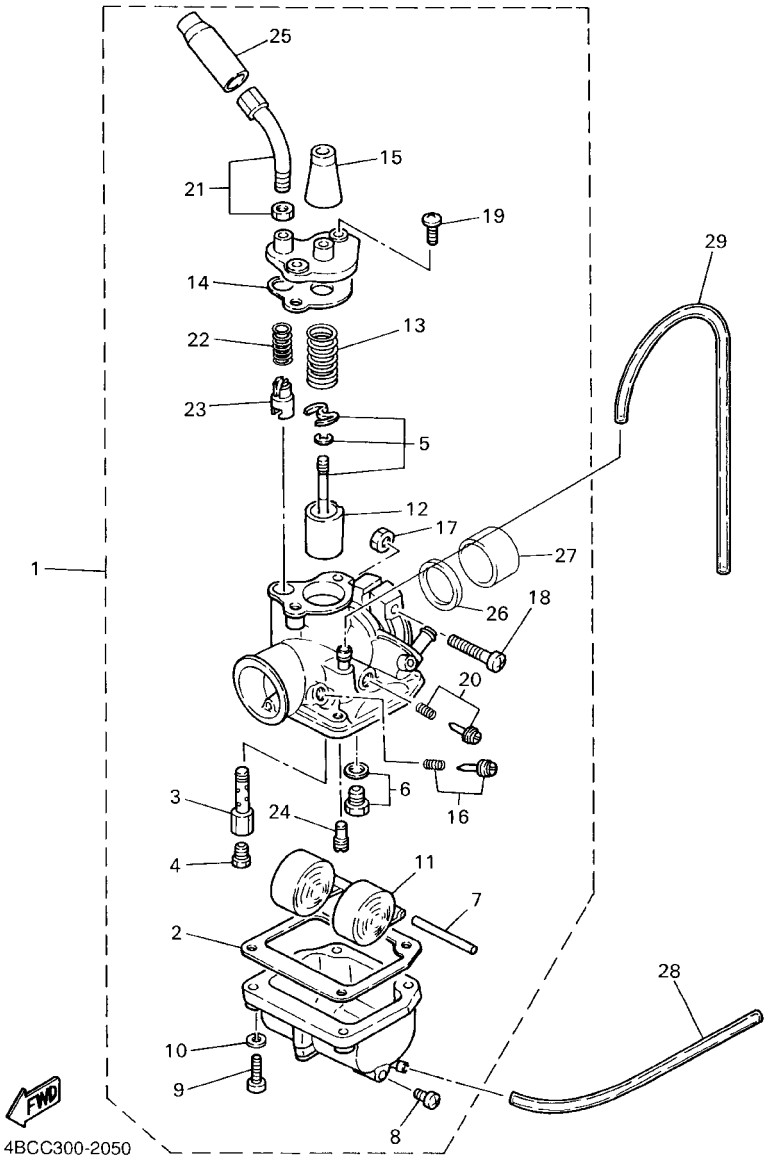

FIG. 5 CARBURETOR

REF. NO.	PART NO.	DESCRIPTION	EUR	ZAF	JPN			REMARKS
26	1M3–14997–00	.SEAL	1	1	1			
27	1V3–14271–00	.INSULATOR	1	1	1			
28	90445–05390	HOSE (L120)	1	1	1			
29	90445–07036	HOSE (L130)	1	1	1			

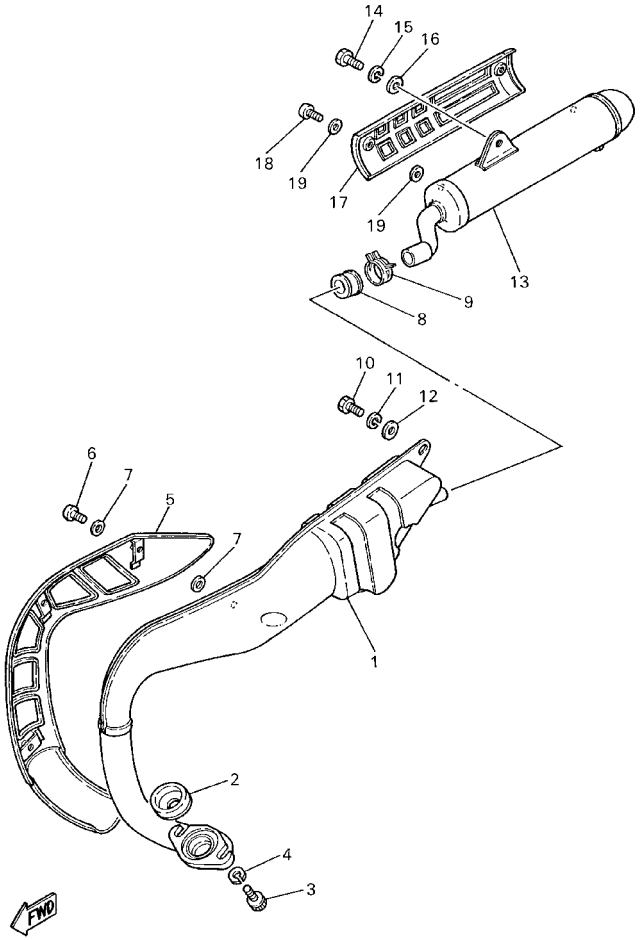

3RV100-5060

FIG. 6 EXHAUST

REF. NO.	PART NO.	DESCRIPTION	EUR	ZAF	JPN			REMARKS
1	21W–14610–02	EXHAUST PIPE ASSY 1	1	1	1			
2	3RV–14623–00	GASKET, EXHAUST PIPE	1	1	1			
3	97007–08020	BOLT	2	2	2			
4	92907–08100	WASHER, SPRING	2	2	2			
5	21W–14708–00	PROTECTOR ASSY	1	1	1			
6	90157–05003	SCREW, PAN HEAD	3	3	3			
7	3RV–14766–00	WASHER, PROTECTOR	6	6	6			
8	4X4–14714–00	GASKET, MUFFLER	1	1	1			
9	90467–22048	CLIP	1	1	1			
10	97007–08016	BOLT	1	1	1			
11	92907–08100	WASHER, SPRING	1	1	1			
12	92907–08600	WASHER, PLATE	1	1	1			
13	21W–14753–02	SILENCER, EXHAUST	1	1	1			
14	97007–08016	BOLT	1	1	1			
15	92907–08100	WASHER, SPRING	1	1	1			
16	92907–08600	WASHER, PLATE	1	1	1			
17	21W–14758–00	PROTECTER, SILENCER	1	1	1			
18	90157–05003	SCREW, PAN HEAD	2	2	2			
19	3RV–14766–00	WASHER, PROTECTOR	4	4	4			

FIG. 7 CRANKCASE

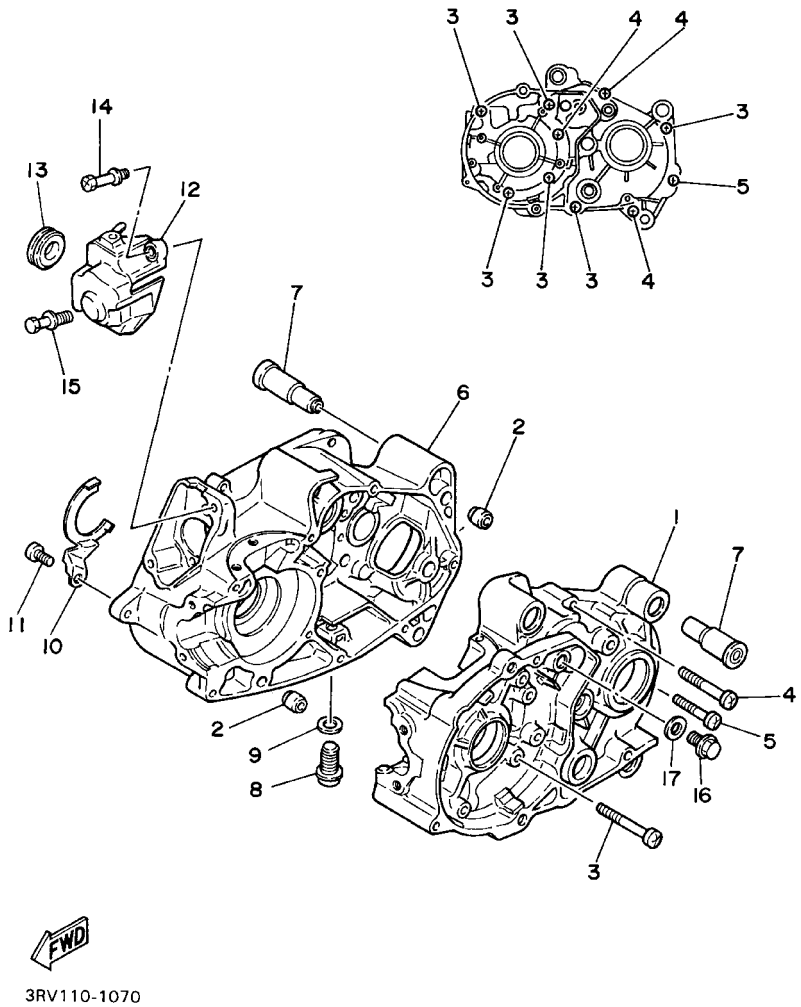

REF. NO.	PART NO.	DESCRIPTION	EUR	ZAF	JPN			REMARKS
1	1W7–15111–03	CRANKCASE 1	1	1	1			
2	99530–12016	PIN, DOWEL	2	2	2			
3	98507–06050	SCREW, PAN HEAD	6	6	6			
4	98507–06045	SCREW, PAN HEAD	3	3	3			
5	98507–06035	SCREW, PAN HEAD	1	1	1			
6	1W7–15121–03	CRANKCASE 2	1	1	1			
7	5T9–15316–01	DAMPER, ENGINE MOUNT 1	6	6	6			
8	90340–12005	PLUG, STRAIGHT SCREW	1	1	1			
9	90430–12227	GASKET	1	1	1			
10	300–15128–00	HOLDER	1	1	1			
11	98507–08010	SCREW, PAN HEAD	1	1	1			
12	517–15416–01	COVER, OIL PUMP	1	1	1			
13	90480–21038	GROMMET	1	1	1			
14	90149–06157	SCREW	1	1	1			
15	90101–06394	BOLT	1	1	1			
16	90105–10147	BOLT, WASHER BASED	1	1	1			
17	90430–10215	GASKET	1	1	1			

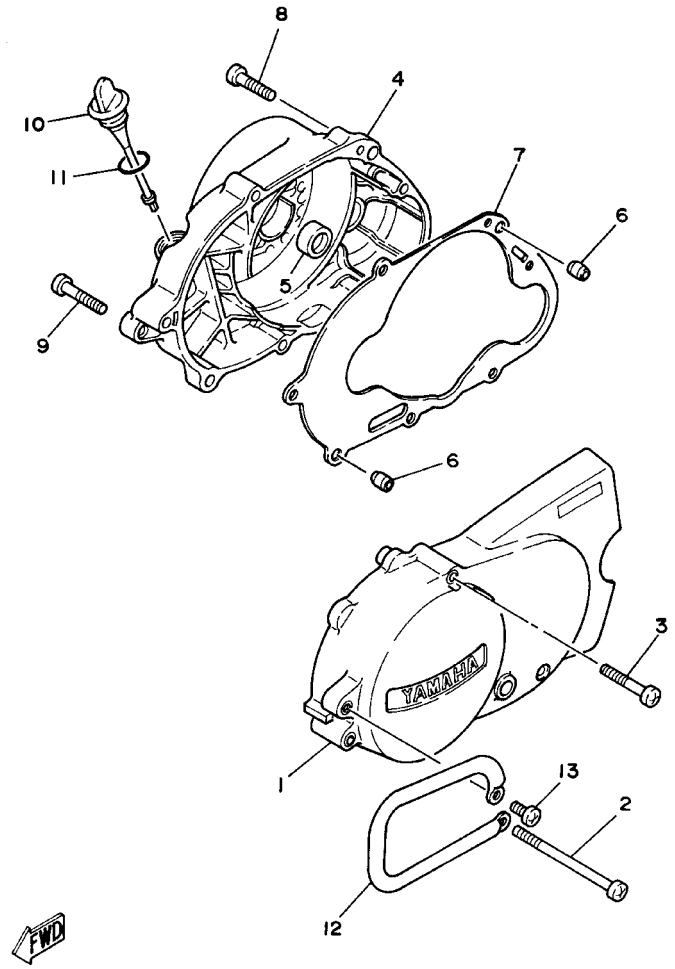

3RV110-1080

FIG. 8 CRANKCASE COVER 1

REF. NO.	PART NO.	DESCRIPTION	EUR	ZAF	JPN			REMARKS
1	21W–15411–00	COVER, CRANKCASE 1	1	1	1			
2	98507–06100	SCREW, PAN HEAD	1	1	1			
3	98507–06045	SCREW, PAN HEAD	3	3	3			
4	5R7–15421–00	COVER, CRANKCASE 2	1	1	1			
5	93104–11053	OIL SEAL	1	1	1			
6	99530–10114	PIN, DOWEL	2	2	2			
7	4AW–15451–00	GASKET, CRANKCASE COVER 1	1	1	1			
8	98507–06035	SCREW, PAN HEAD	6	6	6			
9	98507–06040	SCREW, PAN HEAD	1	1	1			
10	517–15362–02	PLUG, OIL LEVEL	1	1	1			
11	93210–19123	O–RING	1	1	1			
12	21W–15491–01	PROTECTOR	1	1	1			
13	98507–06012	SCREW, PAN HEAD	1	1	1			

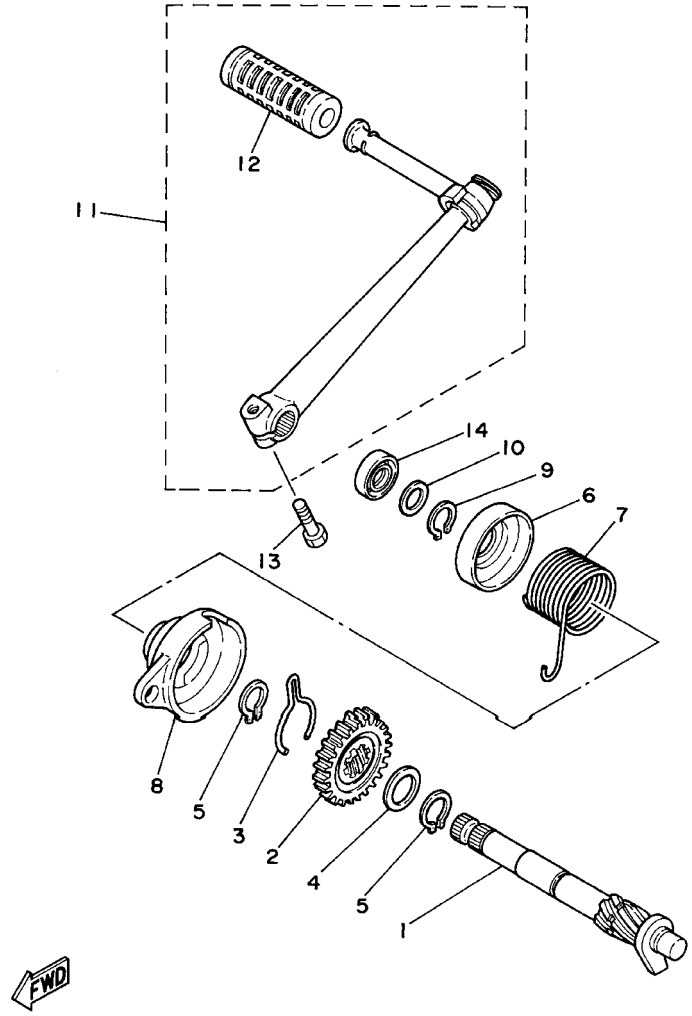

3RV110-1090

FIG. 9 STARTER

REF. NO.	PART NO.	DESCRIPTION	EUR	ZAF	JPN			REMARKS
1	3E5–15660–00	KICK AXLE ASSY	1	1	1			
2	3E5–15641–00	GEAR, KICK (21T)	1	1	1			
3	90468–23194	CLIP	1	1	1			
4	90201–20266	WASHER, PLATE (1.0T)	1	1	1			
5	99009–20400	CIRCLIP	2	2	2			
6	3E5–15676–00	COVER, SPRING	1	1	1			
7	90508–26136	SPRING, TORSION	1	1	1			
8	3E5–15664–00	GUIDE, SPRING	1	1	1			
9	99009–17400	CIRCLIP	1	1	1			
10	90201–15701	WASHER, PLATE (1.0T)	1	1	1			
11	5T9–15620–00	KICK CRANK ASSY	1	1	1			
12	156–15618–01	.COVER, KICK LEVER	1	1	1			
13	97017–06025	BOLT	1	1	1			
14	93109–15001	OIL SEAL	1	1	1			

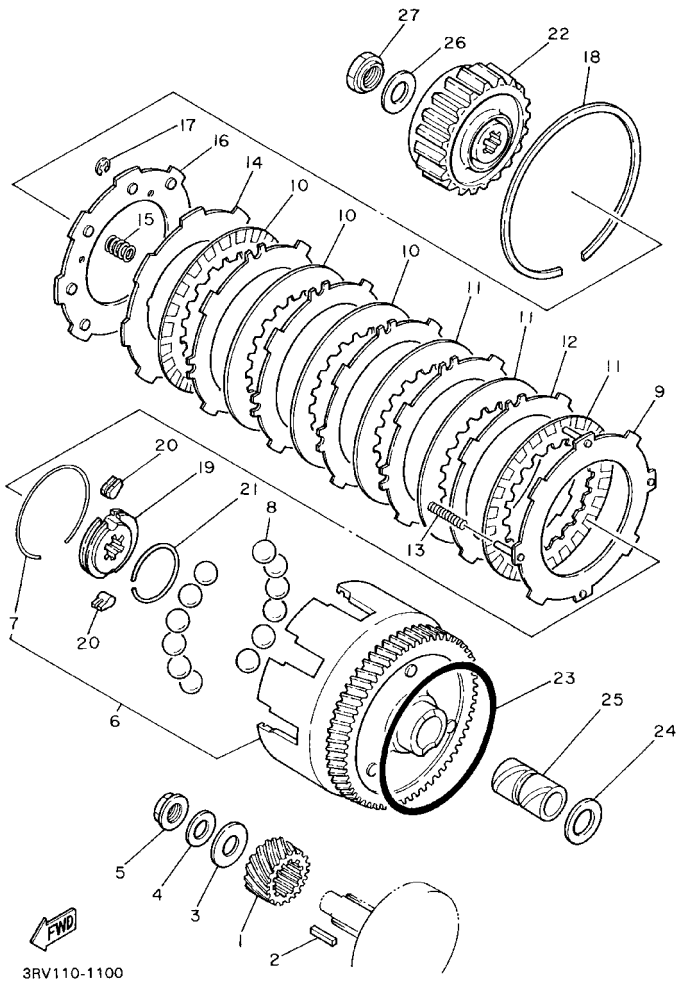

FIG. 10 CLUTCH

REF. NO.	PART NO.	DESCRIPTION	EUR	ZAF	JPN			REMARKS
1	56H–16110–00–30	PRIMARY DRIVE GEAR ASSY	1	1	1			
2	90282–04064	KEY, STRAIGHT	1	1	1			
3	90209–12280	WASHER	1	1	1			
4	90208–12015	WASHER, CONICAL SPRING	1	1	1			
5	90179–12659	NUT	1	1	1			
6	3E5–16150–02	PRIMARY DRIVEN GEAR COMP.	1	1	1			
7	90468–16090	.CLIP	1	1	1			
8	93505–08030	BALL	12	12	12			
9	527–16520–10	PLATE, THRUST WEIGHT	1	1	1			
10	3E5–16521–00	PLATE, FRICTION	3	3	3			
11	3E5–16521–00	PLATE, FRICTION	3	3	3			
12	517–16524–10	PLATE, CLUTCH 1 (1.2T)	5	5	5			UR
	517–16524–20	PLATE, CLUTCH 1 (1.4T)	5	5	5			UR
	517–16524–30	PLATE, CLUTCH 1 (1.6T)	5	5	5			UR
13	90501–10602	SPRING, COMPRESSION	4	4	4			PINK
14	517–16550–10	PRESSURE PLATE ASSY	1	1	1			
15	90501–12088	SPRING, COMPRESSION	6	6	6			
16	517–16561–01	PLATE, PRESSURE 2	1	1	1			
17	99001–03600	CIRCLIP	2	2	2			
18	93451–08094	CIRCLIP	1	1	1			
19	517–16180–00	ONE WAY BOSS COMP.	1	1	1			
20	384–15635–00	PAWL, KICK	2	2	2			
21	2T4–15637–01	SPRING, PAWL	1	1	1			
22	527–16571–01	BOSS, CLUTCH	1	1	1			
23	93210–98202	O–RING	1	1	1			
24	122–16164–00	PLATE, THRUST 2	1	1	1			
25	90560–17146	SPACER	1	1	1			

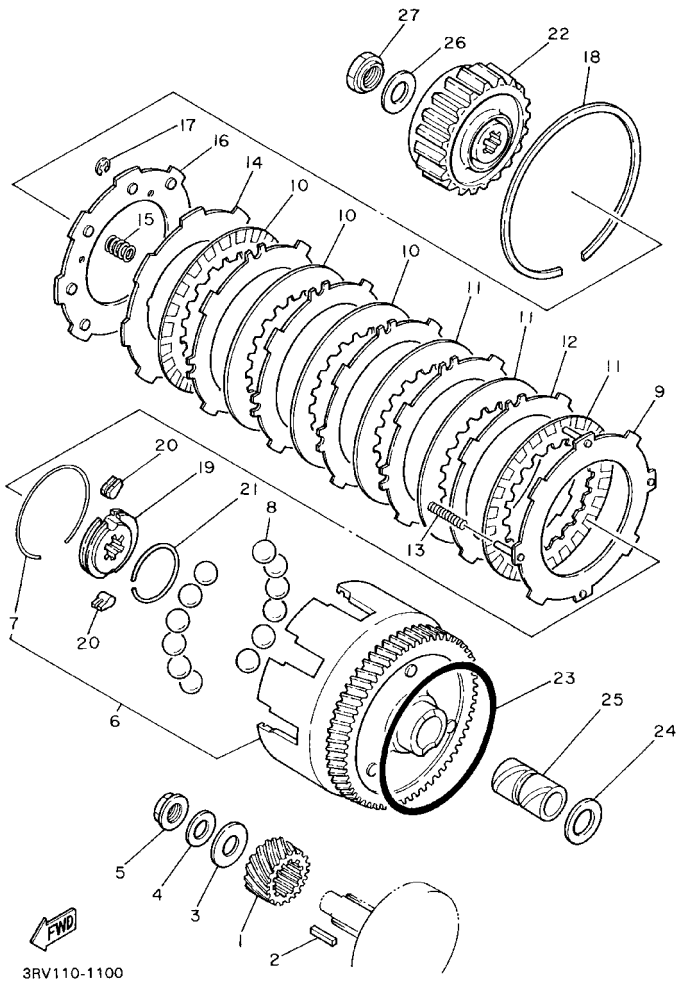

FIG. 10 CLUTCH

REF. NO.	PART NO.	DESCRIPTION	EUR	ZAF	JPN			REMARKS
26	90208–16019	WASHER, CONICAL SPRING	1	1	1			
27	90179–16190	NUT	1	1	1			

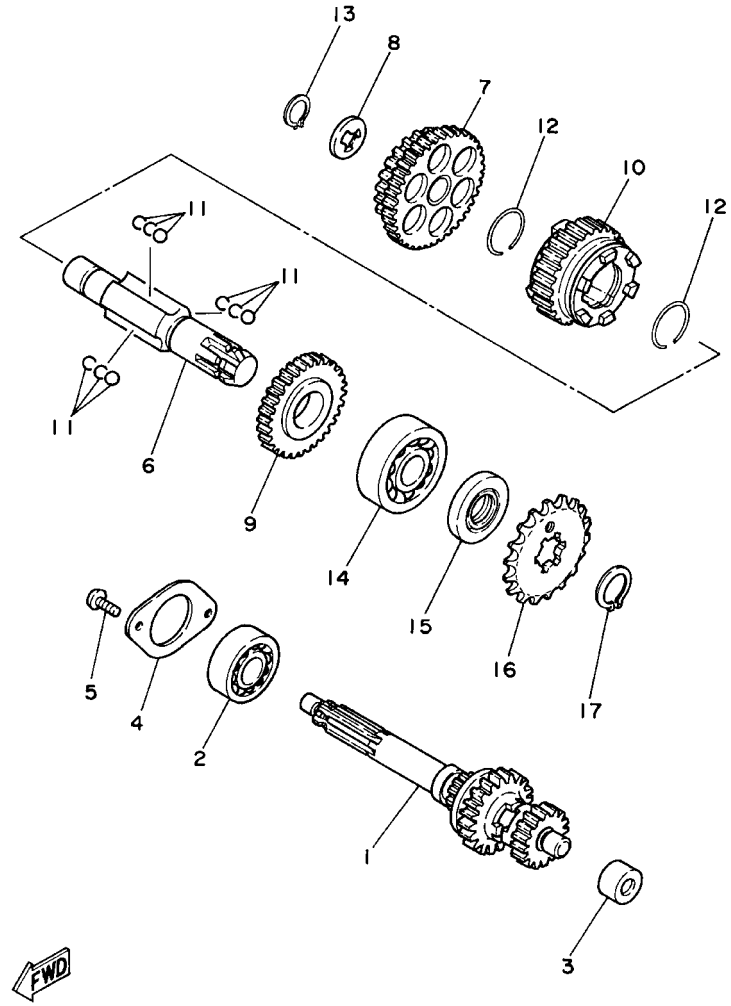

3RV110-1110

FIG. 11 TRANSMISSION

REF. NO.	PART NO.	DESCRIPTION	EUR	ZAF	JPN			REMARKS
1	21W–17410–01	MAIN AXLE COMP.	1	1	1			
2	93306–20301	BEARING	1	1	1			
3	93320–41202	BEARING (BK1212V1)	1	1	1			
4	296–17471–00	PLATE, COVER	1	1	1			
5	98507–06012	SCREW, PAN HEAD	2	2	2			
6	1W7–17421–10	AXLE, DRIVE	1	1	1			
7	1W7–17211–12	GEAR, 1ST WHEEL (39T/26T)	1	1	1			
8	90209–15178	WASHER (0.6T)	1	1	1			UR
	90209–15179	WASHER (0.8T)	1	1	1			UR
	90209–15180	WASHER (1.0T)	1	1	1			UR
9	1W7–17221–20	GEAR, 2ND WHEEL (29T)	1	1	1			
10	21W–17231–00	GEAR, 3RD WHEEL (22T)	1	1	1			
11	93509–32012	BALL	9	9	9			
12	93450–28049	CIRCLIP	2	2	2			
13	93440–15012	CIRCLIP	1	1	1			
14	93306–20401	BEARING (B6204)	1	1	1			
15	93102–20143	OIL SEAL	1	1	1			
16	93812–15063	SPROCKET,DRIVE 15T(5171746152)	1	1	1			
17	93410–20038	CIRCLIP	1	1	1			

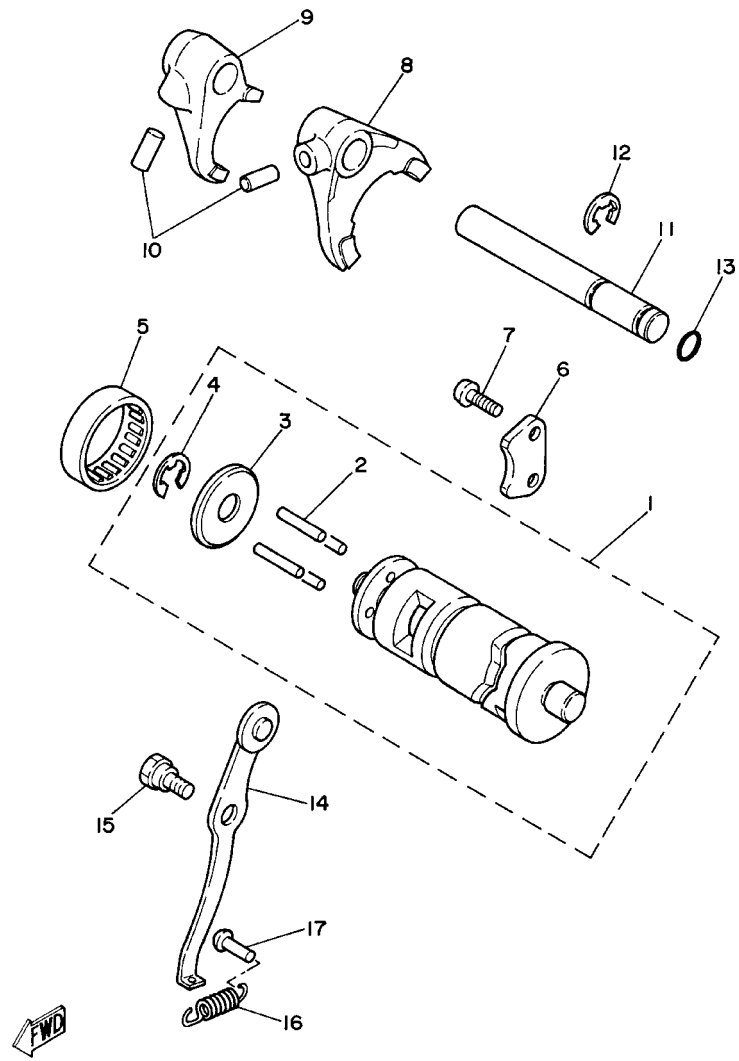

3RV110-1120

FIG. 12 SHIFT CAM. FORK

REF. NO.	PART NO.	DESCRIPTION	EUR	ZAF	JPN			REMARKS
1	21W–18540–01	SHIFT CAM ASSY	1	1	1			
2	93604–22050	.PIN, DOWEL	4	4	4			
3	296–18561–00	.PLATE, SIDE 1	1	1	1			
4	93430–09019	.CIRCLIP	1	1	1			
5	93315–23208	BEARING	1	1	1			
6	296–18562–01	PLATE, STOPPER 2	1	1	1			
7	90150–06032	SCREW, ROUND HEAD	2	2	2			
8	1W7–18511–01	FORK, SHIFT 1	1	1	1			
9	1W7–18512–02	FORK, SHIFT 2	1	1	1			
10	93606–14081	PIN, DOWEL	2	2	2			
11	2N8–18531–00	BAR, SHIFT FORK GUIDE 1	1	1	1			
12	99001–10600	CIRCLIP	1	1	1			
13	93210–09729	O–RING	1	1	1			
14	296–18140–02	STOPPER LEVER ASSY	1	1	1			
15	90109–063F6	BOLT	1	1	1			
16	90506–10002	SPRING, TENSION	1	1	1			
17	132–16346–00	HOOK, SPRING	1	1	1			

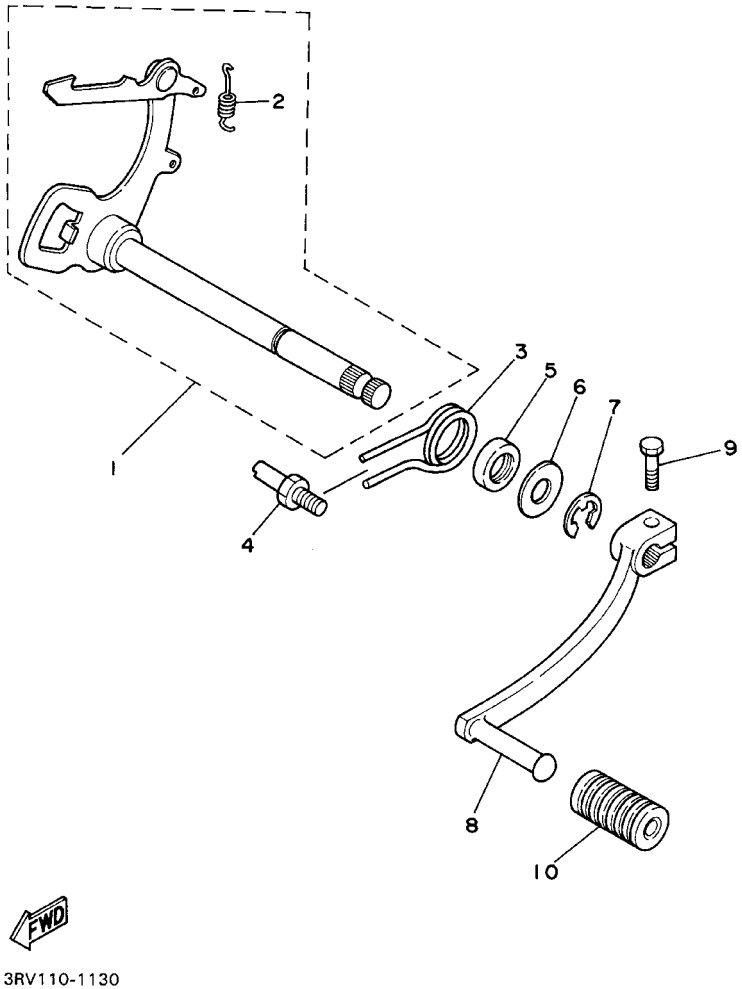

FIG. 13 SHIFT SHAFT

REF. NO.	PART NO.	DESCRIPTION	EUR	ZAF	JPN			REMARKS
1	58H–18101–04	SHIFT SHAFT ASSY	1	1	1			
2	90506–08122	.SPRING, TENSION	1	1	1			
3	90508–32263	SPRING, TORSION	1	1	1			
4	278–18127–01	STOPPER, SCREW	1	1	1			
5	93101–12004	OIL SEAL	1	1	1			
6	90201–12575	WASHER, PLATE	1	1	1			
7	99001–10600	CIRCLIP	1	1	1			
8	21W–18111–00	PEDAL, SHIFT	1	1	1			
9	97027–06020	BOLT	1	1	1			
10	132–18113–01	COVER, SHIFT PEDAL	1	1	1			

FIG. 14 FRAME

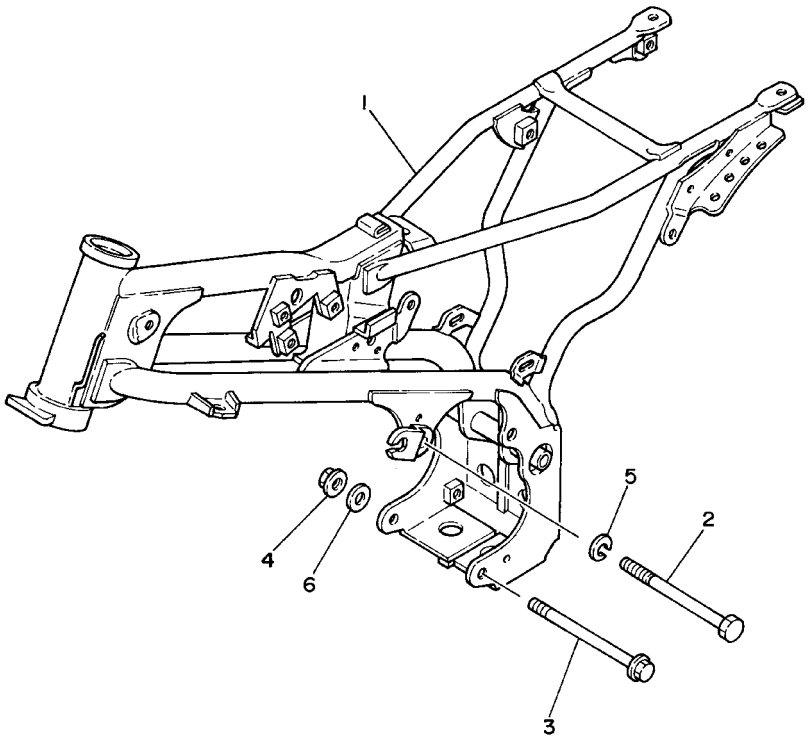

3RV110-1140

REF. NO.	PART NO.	DESCRIPTION	EUR	ZAF	JPN			REMARKS
1	21W–21110–10–33	FRAME COMP.	1	1	1			YB
2	90101–08286	BOLT	1	1	1			
3	95827–08120	BOLT, FLANGE	2	2	2			
4	95707–08500	NUT, FLANGE	2	2	2			
5	92907–08100	WASHER, SPRING	1	1	1			
6	90201–086P8	WASHER, PLATE	3	3	3			

FIG. 15 FRONT FENDER

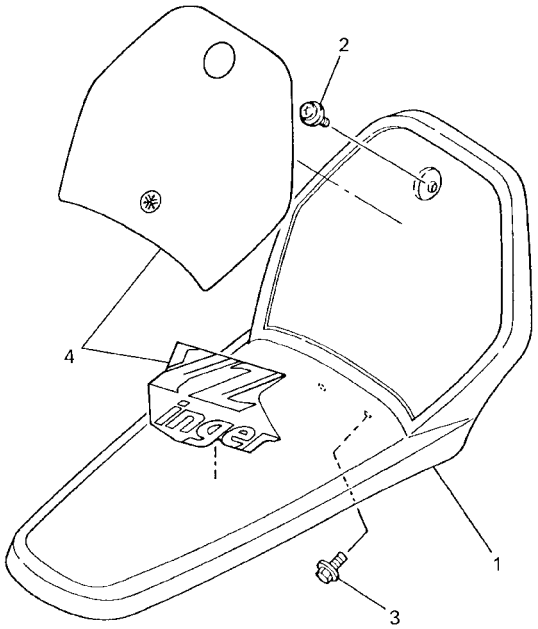

3RVF100-2150

REF. NO.	PART NO.	DESCRIPTION	EUR	ZAF	JPN			REMARKS
1	3RV–21511–20	FENDER, FRONT	1	1	1			
2	90159–06033	SCREW, WITH WASHER	1	1	1			
3	90119–06044	BOLT, WITH WASHER	2	2	2			
4	3RV–21570–60	GRAPHIC SET, FRONT FENDER	1	1	1			

FIG. 16 SIDE COVER

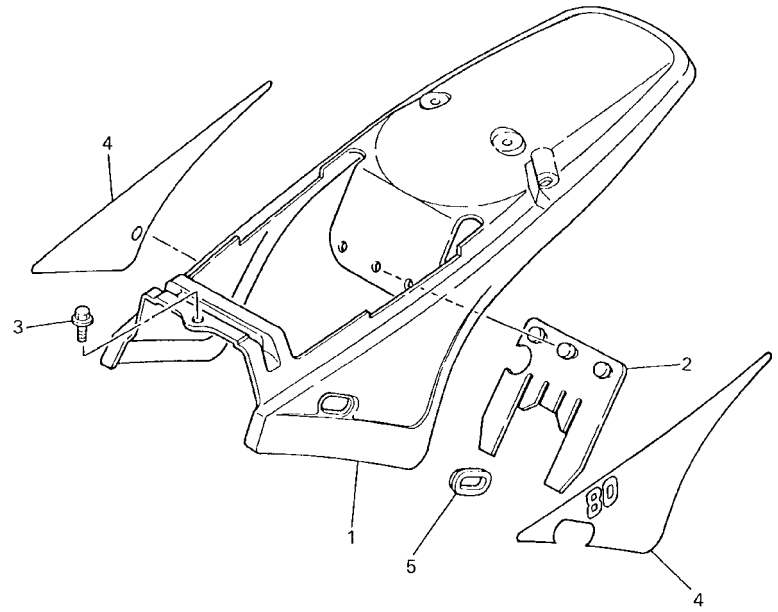

4BC9300-9160

REF. NO.	PART NO.	DESCRIPTION	EUR	ZAF	JPN			REMARKS
1	3RV–21711–20	COVER, SIDE 1	1	1	1			
2	21W–21621–00	FLAP	1	1	1			
3	90159–06016	SCREW, WITH WASHER	3	3	3			
4	3RV–2173L–40	GRAPHIC SET 1	1	1	1			
5	21W–21719–00	GROMMET	1	1	1			

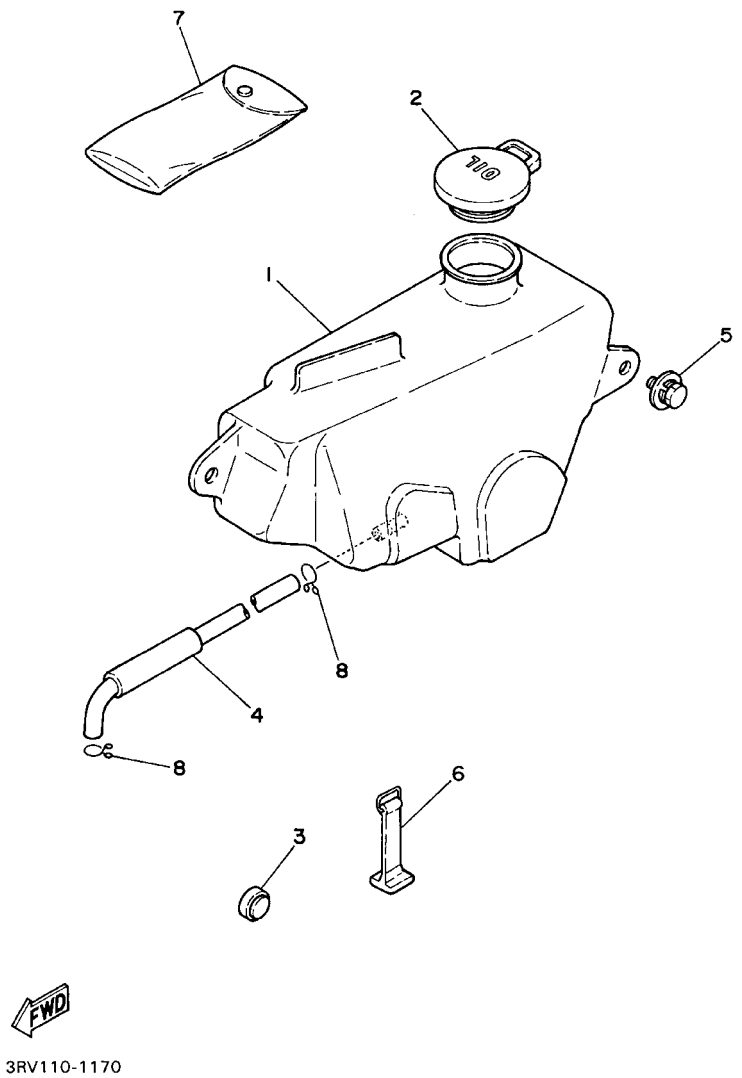

FIG. 17 OIL TANK

REF. NO.	PART NO.	DESCRIPTION	EUR	ZAF	JPN			REMARKS
1	21W–21751–01	TANK, OIL	1	1	1			
2	5R2–21771–00	BODY, CAP	1	1	1			
3	431–24181–00	DAMPER, LOCATING 1	1	1	1			
4	21W–21766–00	PIPE, OIL	1	1	1			
5	90119–06056	BOLT, WITH WASHER	2	2	2			
6	21W–21646–00	BAND	2	2	2			
7	4X4–28100–00	TOOL KIT	1	1	1			
8	90467–08003	CLIP	2	2	2			

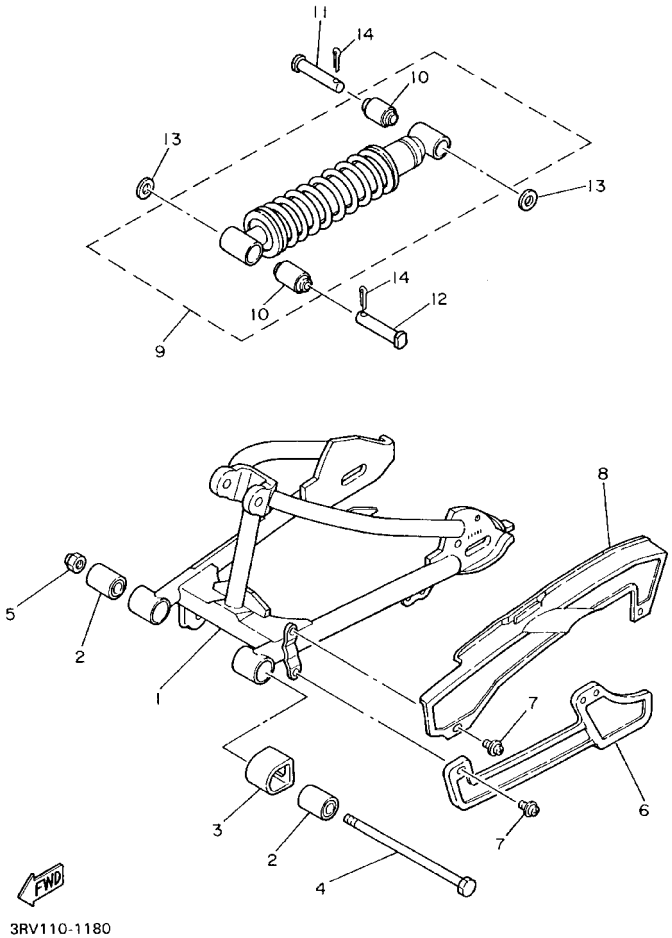

FIG. 18 REAR ARM. SUSPENSION

REF. NO.	PART NO.	DESCRIPTION	EUR	ZAF	JPN			REMARKS
1	21W–22110–00–35	REAR ARM COMP.	1	1	1			SL
2	102–22123–00	BUSH 1	2	2	2			
3	3R0–22151–00	SEAL, GUARD	1	1	1			
4	288–22141–00	SHAFT, PIVOT	1	1	1			
5	90185–10037	NUT, SELF–LOCKING	1	1	1			
6	21W–22199–00	SUPPORT, CHAIN	1	1	1			
7	90159–05028	SCREW, WITH WASHER	5	5	5			
8	21W–22311–00	CASE, CHAIN	1	1	1			
9	3RV–22210–11	SHOCK ABSORBER ASSY, REAR	1	1				
	3RV–22210–21	SHOCK ABSORBER ASSY, REAR			1			
10	3M7–22216–00	.BUSH, REAR SHOCK ABSORBER	2	2	2			
11	90240–10072	PIN, CLEVIS	1	1	1			
12	90240–10069	PIN, CLEVIS	1	1	1			
13	90201–106H5	WASHER, PLATE	2	2	2			
14	91401–25020	PIN, COTTER	2	2	2			

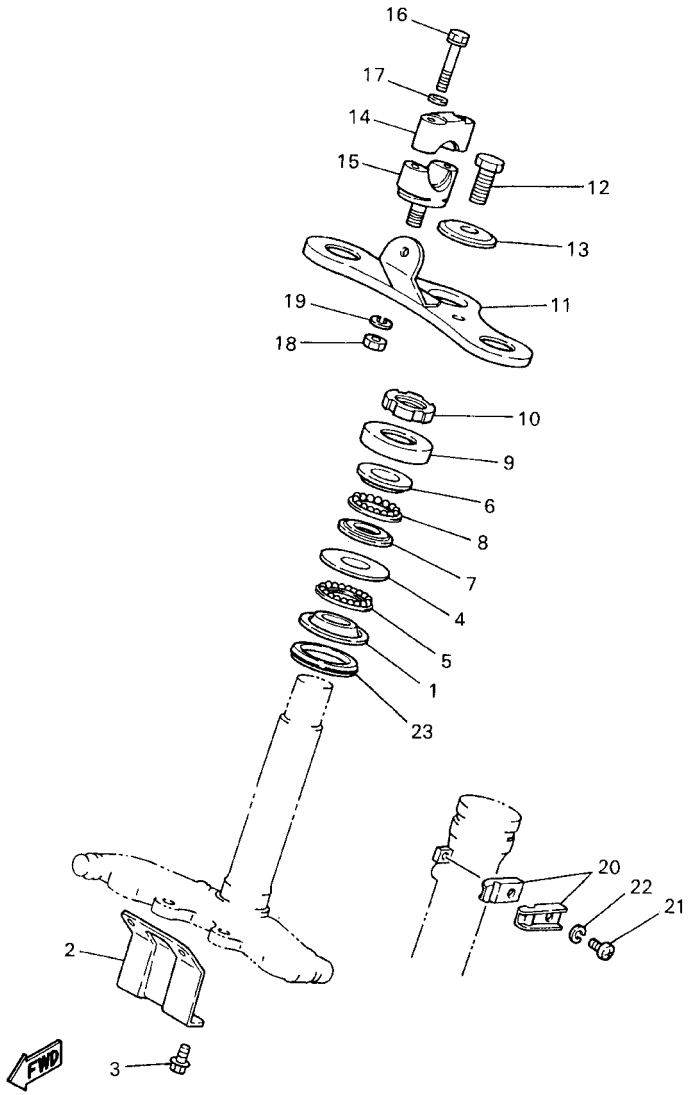

4BCB300-1190

FIG. 19 STEERING

REF. NO.	PART NO.	DESCRIPTION	EUR	ZAF	JPN			REMARKS
1	156–23411–00	RACE, BALL 1	1	1	1			
2	21W–23486–00	STAY, PLATE	1	1	1			
3	5HN–23492–00	BOLT	2	2	2			
4	156–23412–00	RACE, BALL 2	1	1	1			
5	156–2341E–00	RETAINER, BALL BEARING	1	1	1			
6	22F–23411–01	RACE, BALL 1	1	1	1			
7	22F–23412–01	RACE, BALL 2	1	1	1			
8	22F–2341E–00	RETAINER, BALL BEARING	1	1	1			
9	122–23416–00	COVER, BALL RACE 2	1	1	1			
10	90179–25051	NUT	1	1	1			
11	3RV–23435–00	CROWN, HANDLE	1	1	1			
12	90105–10006	BOLT, WASHER BASED	1	1	1			
13	90209–10160	WASHER	1	1	1			
14	3RV–23441–01	HOLDER, HANDLE UPPER	2	2	2			
15	462–23442–00–35	HOLDER, HANDLE LOWER	2	2	2			SL
16	97014–06035	BOLT	4	4	4			
17	92903–06600	WASHER, PLATE	4	4	4			
18	95307–10600	NUT	2	2	2			
19	92907–10100	WASHER, SPRING	2	2	2			
20	90462–14055	CLAMP	2	2	2			
21	98507–06012	SCREW, PAN HEAD	1	1	1			
22	92907–06100	WASHER, SPRING	1	1	1			
23	164–23462–00	SEAL, STEERING	1	1	1			

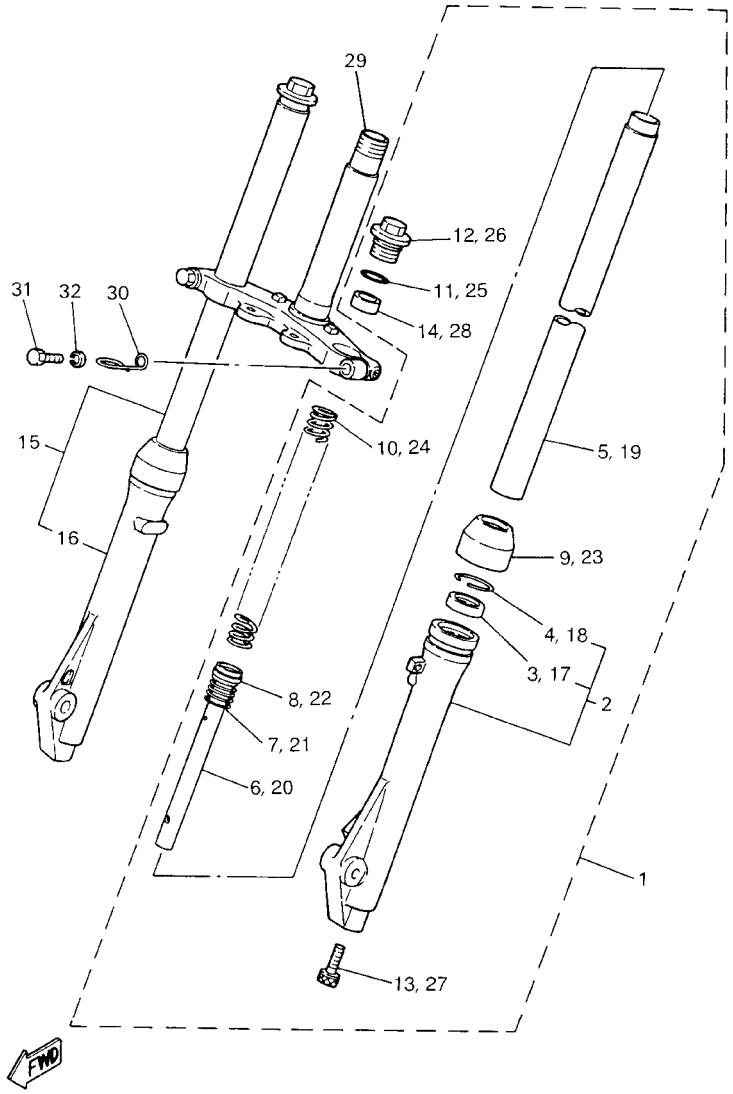

3RVE100-1200

FIG. 20 FRONT FORK

REF. NO.	PART NO.	DESCRIPTION	EUR	ZAF	JPN			REMARKS
1	3RV–23102–01	FRONT FORK ASSY (L.H)	1	1	1			
2	3RV–23126–01	.TUBE, OUTER (LEFT)	1	1	1			
3	3M7–23145–00	..OIL SEAL	1	1	1			
4	3M7–23156–00	..CLIP, OIL SEAL	1	1	1			
5	21W–23110–00	.INNER TUBE COMP.1	1	1	1			
6	3R0–23170–00	.CYLINDER COMP., FRONT FORK	1	1	1			
7	2J5–23151–00	.SPRING, REBOUND	1	1	1			
8	2J5–23157–00	.RING, PISTON	1	1	1			
9	3M7–23144–00	.SEAL, DUST	1	1	1			
10	21W–23141–00	.SPRING, FRONT FORK	1	1	1			
11	2J5–23147–00	.O–RING	1	1	1			
12	3M7–23111–01	.BOLT, CAP	1	1	1			
13	3M7–23181–00	.BOLT, HEXAGON SOCKET HEAD	1	1	1			WITH WASHER
14	3M7–23142–00	.SEAT, SPRING UPPER	1	1	1			
15	3RV–23103–01	FRONT FORK ASSY (R.H)	1	1	1			
16	3RV–23136–01	.TUBE, OUTER (RIGHT)	1	1	1			
17	3M7–23145–00	..OIL SEAL	1	1	1			
18	3M7–23156–00	..CLIP, OIL SEAL	1	1	1			
19	21W–23110–00	.INNER TUBE COMP.1	1	1	1			
20	3R0–23170–00	.CYLINDER COMP., FRONT FORK	1	1	1			
21	2J5–23151–00	.SPRING, REBOUND	1	1	1			
22	2J5–23157–00	.RING, PISTON	1	1	1			
23	3M7–23144–00	.SEAL, DUST	1	1	1			
24	21W–23141–00	.SPRING, FRONT FORK	1	1	1			
25	2J5–23147–00	.O–RING	1	1	1			
26	3M7–23111–01	.BOLT, CAP	1	1	1			
27	3M7–23181–00	.BOLT, HEXAGON SOCKET HEAD	1	1	1			WITH WASHER

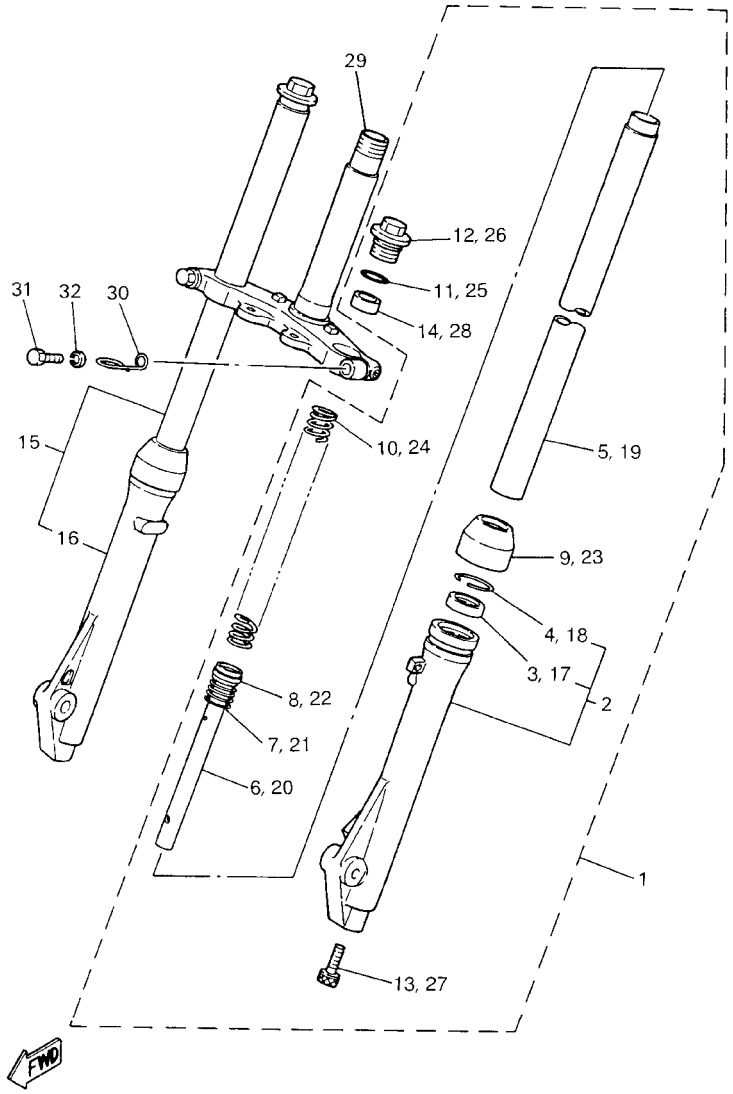

3RVE100-1200

FIG. 20 FRONT FORK

REF. NO.	PART NO.	DESCRIPTION	EUR	ZAF	JPN			REMARKS
28	3M7–23142–00	.SEAT, SPRING UPPER	1	1	1			
29	5HN–23340–00	UNDER BRACKET COMP.	1	1	1			
30	3R0–23318–00	HOLDER, CABLE 1	1	1	1			
31	451–23346–00	BOLT 1	2	2	2			
32	92901–10100	WASHER, SPRING	2	2	2			

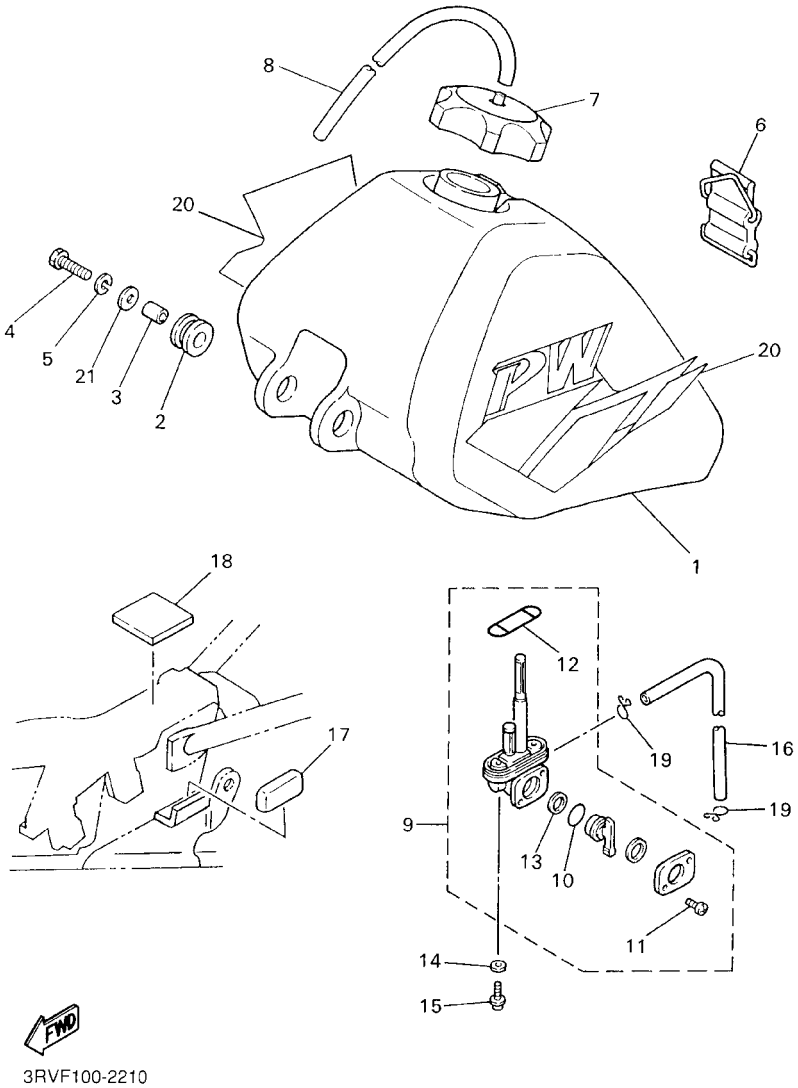

FIG. 21 FUEL TANK

REF. NO.	PART NO.	DESCRIPTION	EUR	ZAF	JPN			REMARKS
1	3RV–24110–20	FUEL TANK COMP.	1	1	1			
2	90480–18290	GROMMET	2	2	2			
3	90387–07598	COLLAR	2	2	2			
4	97027–06030	BOLT	2	2	2			
5	92907–06100	WASHER, SPRING	2	2	2			
6	59V–24173–00	BAND, TANK FITTING 1	1	1	1			
7	2FG–24610–00	CAP ASSY	1	1	1			
8	90445–084J1	HOSE (L420)	1	1	1			
9	4X8–24500–02	FUEL COCK ASSY 1	1	1	1			
10	4X8–24512–00	.O–RING	1	1	1			
11	97801–03008	.SCREW, PAN HEAD	2	2	2			
12	3AJ–24534–00	.SEAL, COCK	1	1	1			
13	3AJ–24523–00	.VALVE PACKING	1	1	1			
14	90202–05193	WASHER, PLATE	2	2	2			
15	90149–06011	SCREW	2	2	2			
16	90445–09082	HOSE	1	1	1			
17	21W–24181–00	DAMPER, LOCATING 1	2	2	2			
18	2X6–24183–00	DAMPER, LOCATING 3	1	1	1			
19	90467–08003	CLIP	2	2	2			
20	3RV–24240–80	GRAPHIC SET	1	1	1			
21	90201–06072	WASHER, PLATE	2	2	2			

FIG. 22 SEAT

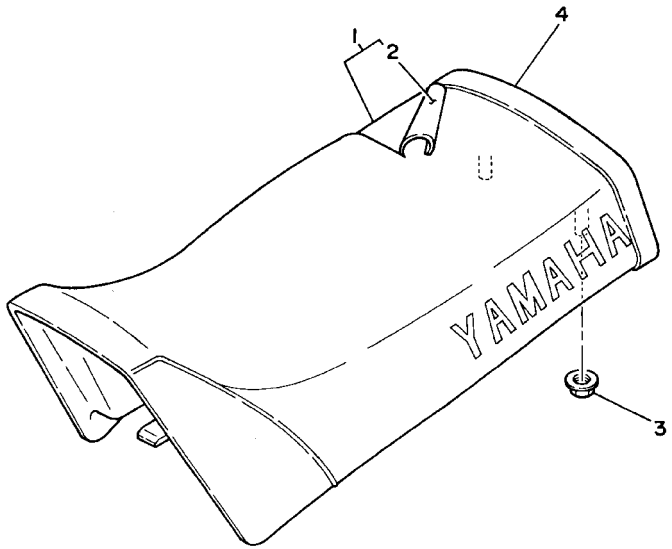

3RV110-1220

REF. NO.	PART NO.	DESCRIPTION	EUR	ZAF	JPN			REMARKS
1	3RV–24770–40	SEMI–DOUBLE SEAT ASSY	1	1	1			
2	3RV–24731–40	.COVER, SEAT	1	1	1			
3	90179–06403	NUT	2	2	2			
4	3RV–24734–40	BAND, SEAT	1	1	1			

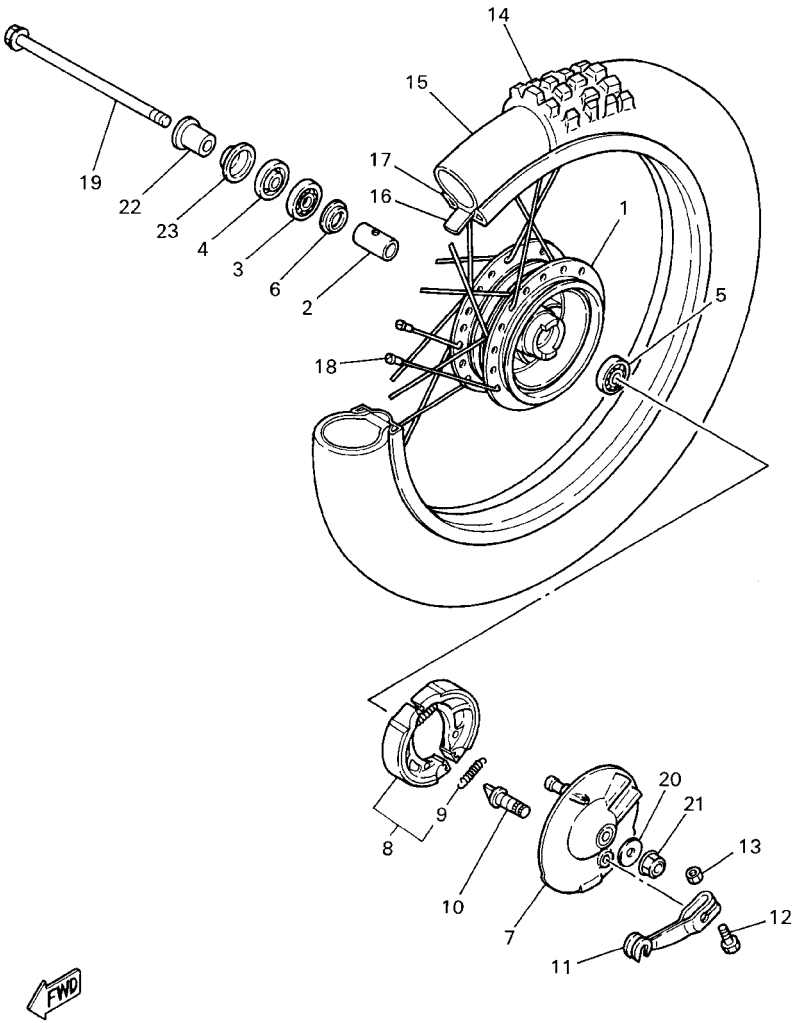

4BCC300-2230

FIG. 23 FRONT WHEEL

REF. NO.	PART NO.	DESCRIPTION	EUR	ZAF	JPN			REMARKS
1	451–25111–00–98	HUB, FRONT	1	1	1			LGB
2	90560–10103	SPACER	1	1	1			
3	93306–20004	BEARING (B6200)	1	1	1			
4	93106–17006	OIL SEAL	1	1	1			
5	93306–20009	BEARING (B6200RS)	1	1	1			
6	2E9–25116–00	FLANGE, SPACER 2	1	1	1			
7	3R0–25121–00–98	PLATE, BRAKE SHOE	1	1	1			LGB
8	3EC–W253A–00	BRAKE SHOE KIT	1	1	1			
9	90506–14081	.SPRING, TENSION	2	2	2			
10	1YT–25351–00	CAMSHAFT	1	1	1			
11	451–25155–00	LEVER, CAMSHAFT 1	1	1	1			
12	90101–06291	BOLT	1	1	1			
13	95307–06600	NUT	1	1	1			
14	94125–141A6	TIRE (2.50–14)	1	1	1			
15	94225–14215	TUBE (2.50–14)	1	1	1			
16	94325–14129	BAND, RIM (2.50–14)	1	1	1			
17	94414–14227	RIM (1.40–14)	1	1	1			
18	3R0–25104–00	SPOKE SET, FRONT	1	1	1			
19	5HN–25181–00	AXLE, WHEEL	1	1	1			
20	92907–10200	WASHER, PLAIN	1	1	1			
21	95607–10200	NUT, SELF–LOCKING	1	1	1			
22	90387–10744	COLLAR	1	1	1			
23	451–25118–00	COVER, HUB DUST	1	1	1			

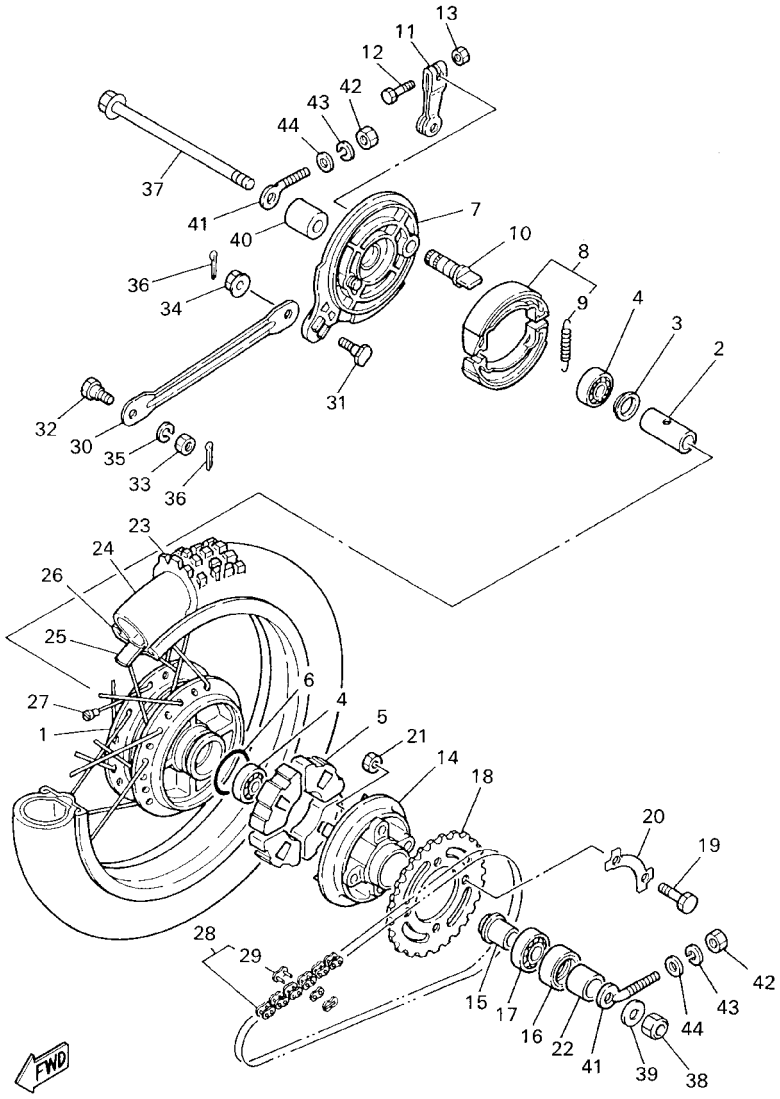

FIG. 24 REAR WHEEL

REF. NO.	PART NO.	DESCRIPTION	EUR	ZAF	JPN			REMARKS
1	21W–25311–00–98	HUB, REAR	1	1	1			LGB
2	90560–12145	SPACER	1	1	1			
3	102–25315–00	FLANGE, SPACER	1	1	1			
4	93306–30111	BEARING	2	2	2			
5	21W–25364–00	DAMPER	4	4	4			
6	93210–41041	O–RING	1	1	1			
7	1M3–25321–02–98	PLATE, BRAKE SHOE	1	1	1			LGB
8	4BE–W253E–00	BRAKE SHOE KIT	1	1	1			
9	90506–15260	.SPRING, TENSION	2	2	2			
10	3Y6–25351–00	CAMSHAFT	1	1	1			
11	538–25355–00	LEVER, CAMSHAFT	1	1	1			
12	90101–06278	BOLT	1	1	1			
13	95307–06600	NUT	1	1	1			
14	296–25366–01–98	CLUTCH, HUB	1	1	1			LGB
15	21W–25387–00	AXLE, SPROCKET	1	1	1			
16	93106–30004	OIL SEAL	1	1	1			
17	93306–00406	BEARING (B6004Z)	1	1	1			NTN
18	21W–25432–10	SPROCKET, DRIVEN (32T)	1	1	1			
19	90101–08672	BOLT	4	4	4			
20	4AW–25412–00	WASHER	2	2	2			
21	90170–08366	NUT	4	4	4			
22	90387–207G3	COLLAR	1	1	1			
23	94130–121A7	TIRE (3.00–12)	1	1	1			
24	94227–12216	TUBE (2.75–12)	1	1	1			
25	94330–12130	BAND, RIM (3.00–12)	1	1	1			
26	94416–12002	RIM (1.60–12)	1	1	1			
27	21W–25304–00	SPOKE SET, REAR	1	1	1			

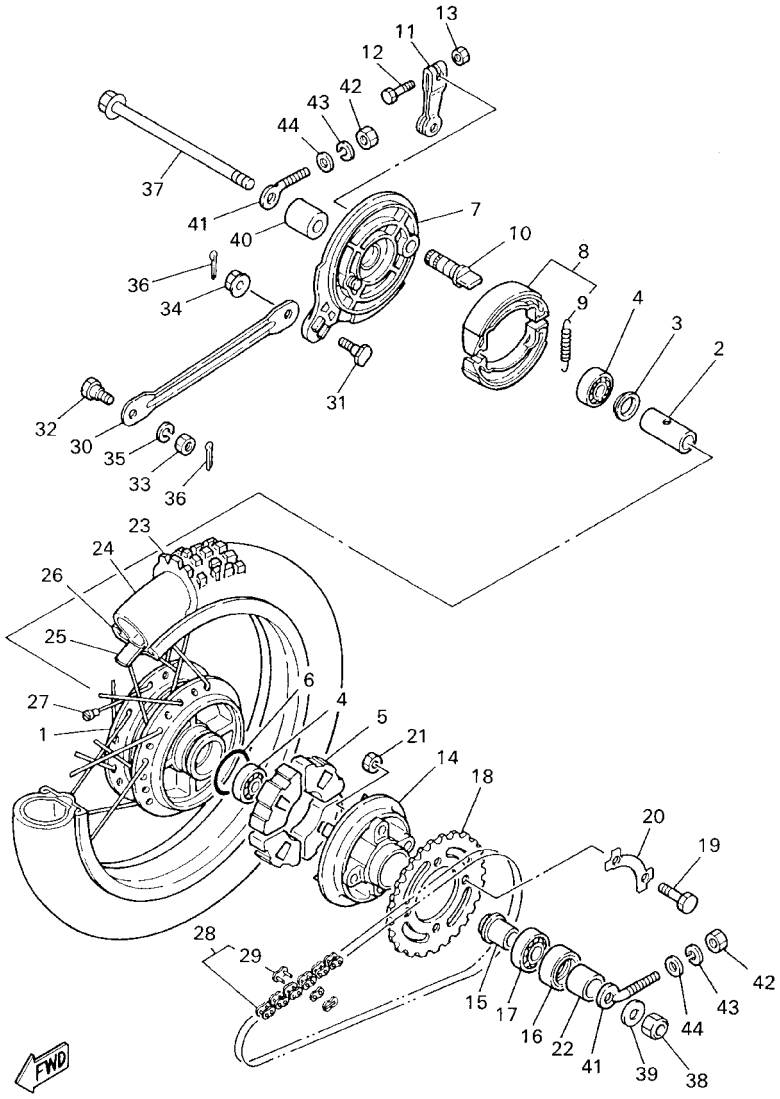

FIG. 24 REAR WHEEL

REF. NO.	PART NO.	DESCRIPTION	EUR	ZAF	JPN			REMARKS
28	94580–52084	CHAIN (DID 420M 84L)	1	1	1			
29	94680–52001	.JOINT, CHAIN(DID 420M)	1	1	1			
30	21W–25371–00	BAR, TENSION	1	1	1			
31	90109–08183	BOLT	1	1	1			
32	90109–08368	BOLT	1	1	1			
33	95307–08700	NUT	1	1	1			
34	95707–08500	NUT, FLANGE	1	1	1			
35	92907–08600	WASHER, PLATE	1	1	1			
36	91401–20015	PIN, COTTER	2	2	2			
37	5HN–25381–00	AXLE, WHEEL	1	1	1			
38	95607–12100	NUT, U	1	1	1			
39	90201–12190	WASHER, PLATE	1	1	1			
40	90387–12412	COLLAR	1	1	1			
41	102–25389–00	PULLER, CHAIN 2	2	2	2			
42	95307–06600	NUT	2	2	2			
43	92907–06100	WASHER, SPRING	2	2	2			
44	90201–061A5	WASHER, PLATE	2	2	2			

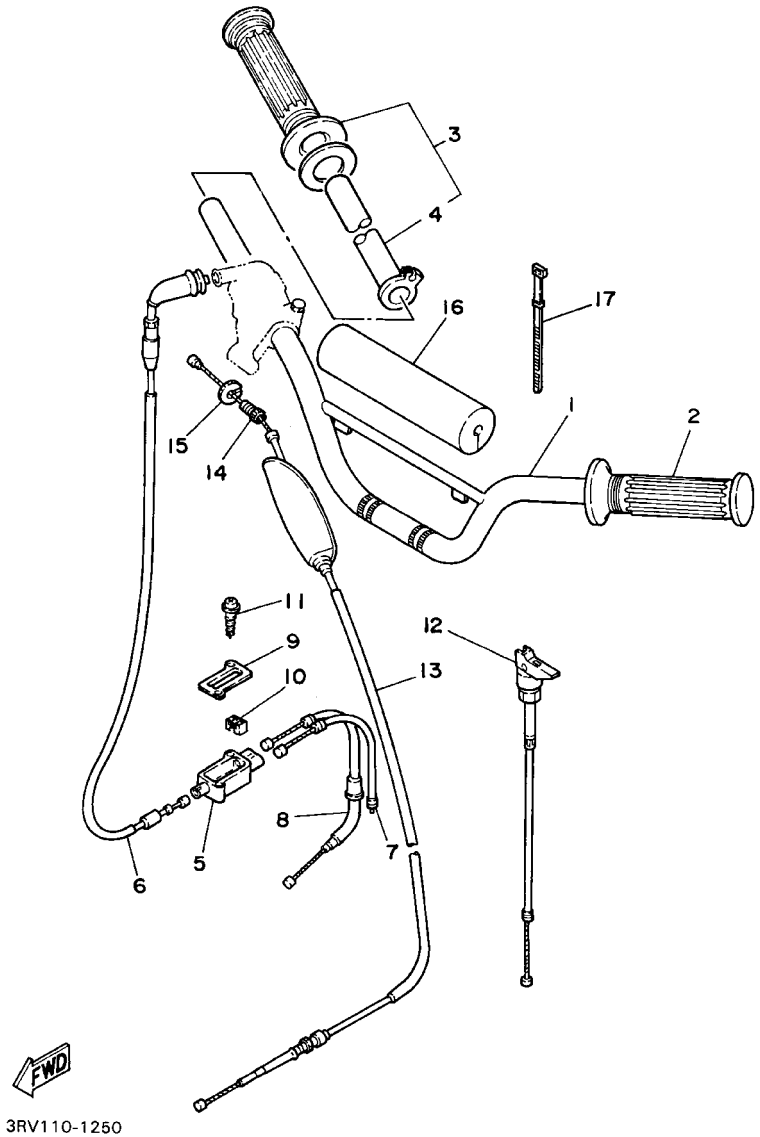

FIG. 25 STEERING HANDLE. CABLE

REF. NO.	PART NO.	DESCRIPTION	EUR	ZAF	JPN			REMARKS
1	3RV–26111–00	HANDLEBAR	1	1	1			
2	2N3–26241–00	GRIP	1	1	1			BLACK
3	21W–26240–00	GRIP ASSY	1	1	1			
4	434–26243–12	.TUBE, THROTTLE GUIDE	1	1	1			
5	21W–26261–00	CONNECTOR, CABLE	1	1	1			
6	21W–26311–02	CABLE, THROTTLE 1	1	1	1			
7	21W–26312–01	CABLE, THROTTLE 2	1	1	1			
8	21W–26321–02	CABLE, PUMP	1	1	1			
9	21W–26262–00	CAP, CABLE CONNECTOR	1	1	1			
10	21W–26263–00	PIECE, CONNECTING	1	1	1			
11	90167–03004	SCREW, TAPPING	2	2	2			
12	21W–26331–00	CABLE, STARTER 1	1	1	1			
13	21W–26341–01	CABLE, BRAKE	1	1	1			
14	90123–08013	BOLT	1	1	1			
15	90179–08148	NUT	1	1	1			
16	21W–26124–00	PROTECTOR, HANDLEBAR	1	1	1			
17	437–83936–11	BAND, SWITCH CORD	2	2	2			

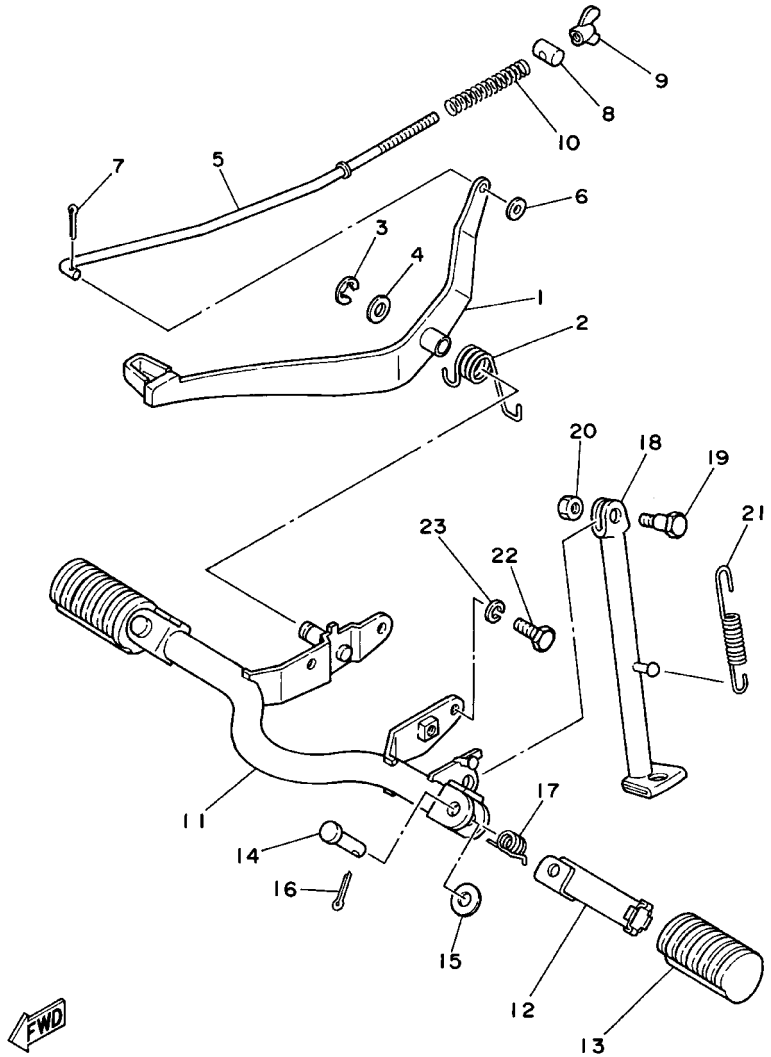

3RV110-1260

FIG. 26 STAND. FOOTREST

REF. NO.	PART NO.	DESCRIPTION	EUR	ZAF	JPN			REMARKS
1	21W–27211–00	PEDAL, BRAKE	1	1	1			
2	90508–29578	SPRING, TORSION	1	1	1			
3	99001–09600	CIRCLIP	1	1	1			
4	92907–12600	WASHER	1	1	1			
5	21W–27231–00	ROD, BRAKE	1	1	1			
6	92907–06600	WASHER, PLATE	1	1	1			
7	91401–20012	PIN, COTTER	1	1	1			
8	90249–12008	PIN	1	1	1			
9	90175–06013	NUT, WING	1	1	1			
10	90501–10245	SPRING, COMPRESSION	1	1	1			
11	21W–27411–01–33	FOOTREST 1	1	1	1			YB
12	214–27421–00	FOOTREST 2	2	2	2			UNICHROME (BLACK)
13	214–27413–00	COVER, FOOTREST	2	2	2			
14	90240–08084	PIN, CLEVIS	2	2	2			
15	92907–08600	WASHER, PLATE	2	2	2			
16	91401–25015	PIN, COTTER	2	2	2			
17	90508–20023	SPRING, TORSION	2	2	2			
18	21W–27311–01	STAND, SIDE	1	1	1			
19	90109–08666	BOLT	1	1	1			
20	95307–08700	NUT	1	1	1			
21	90506–28100	SPRING, TENSION	1	1	1			
22	97027–08020	BOLT	2	2	2			
23	92907–08100	WASHER, SPRING	2	2	2			

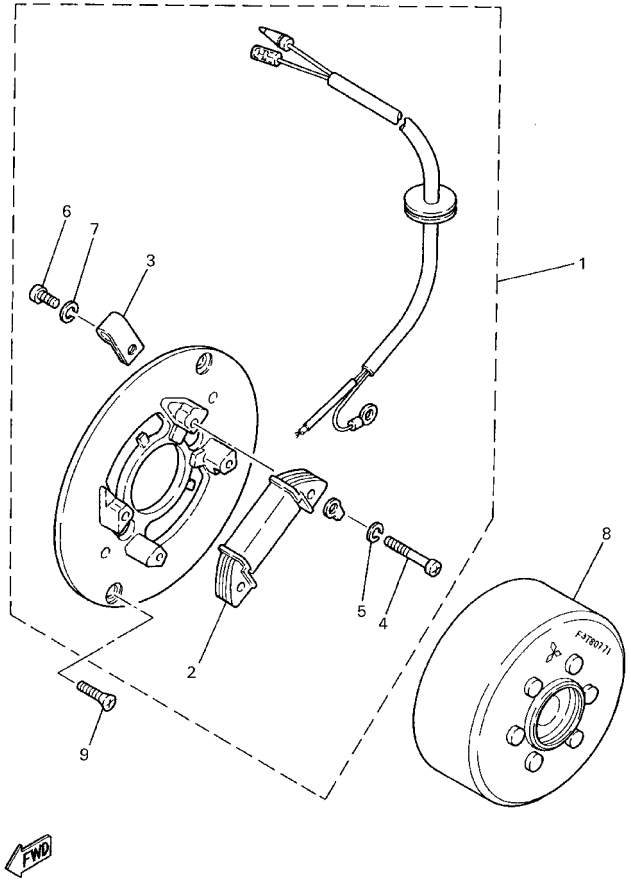

FIG. 27 GENERATOR

REF. NO.	PART NO.	DESCRIPTION	EUR	ZAF	JPN			REMARKS
1	21W–85510–21	STATOR ASSY	1	1	1			
2	21W–85512–21	.COIL, SOURCE	1	1	1			
3	104–81328–20	.CLAMP	1	1	1			
4	98502–04025	.SCREW, PAN HEAD	2	2	2			
5	92902–04100	.WASHER, SPRING	2	2	2			
6	98502–04008	.SCREW, PAN HEAD	1	1	1			
7	92902–04100	.WASHER, SPRING	1	1	1			
8	21W–85550–21	ROTOR ASSY	1	1	1			
9	90151–05055	SCREW, COUNTERSUNK	2	2	2			

FIG. 28 HANDLE SWITCH. LEVER

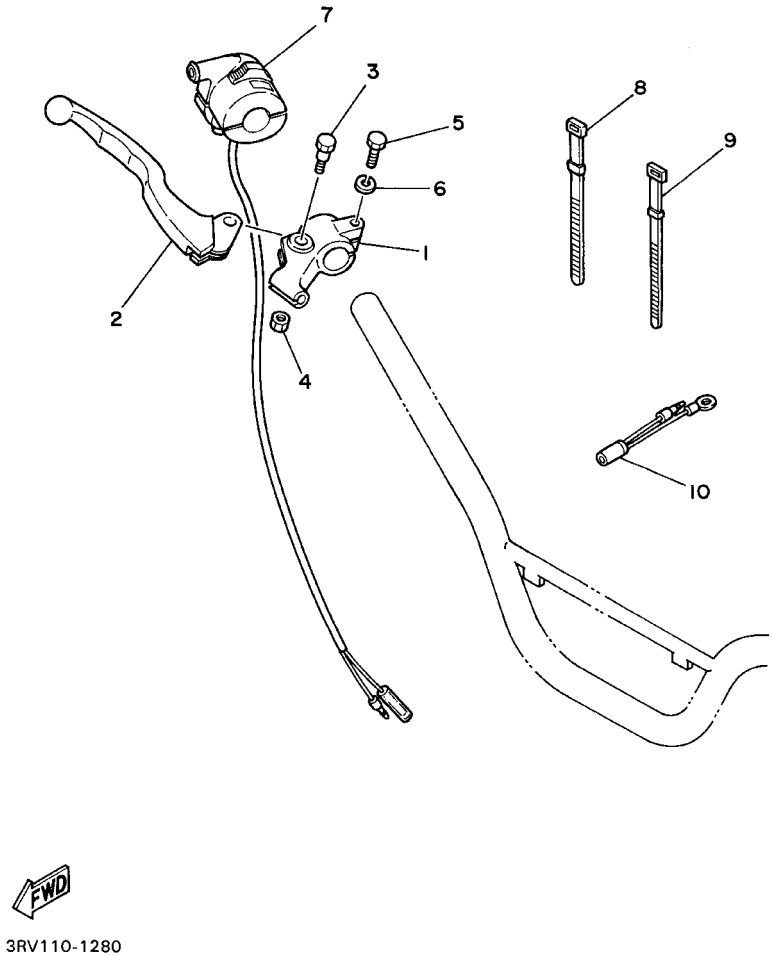

REF. NO.	PART NO.	DESCRIPTION	EUR	ZAF	JPN			REMARKS
1	233–82921–31	HOLDER, LEVER 2	1	1	1			
2	23X–83922–00	LEVER 2	1	1	1			
3	90109–06798	BOLT	1	1	1			
4	95607–06100	NUT, U	1	1	1			
5	97007–06022	BOLT	1	1	1			
6	92907–06100	WASHER, SPRING	1	1	1			
7	21W–83976–00	SWITCH, HANDLE 1	1	1	1			
8	437–83936–01	BAND, SWITCH CORD	1	1	1			
9	437–83936–11	BAND, SWITCH CORD	1	1	1			
10	4V0–82519–00	WIRE, EARTH LEAD	1	1	1			

FIG. 29 ELECTRICAL 1

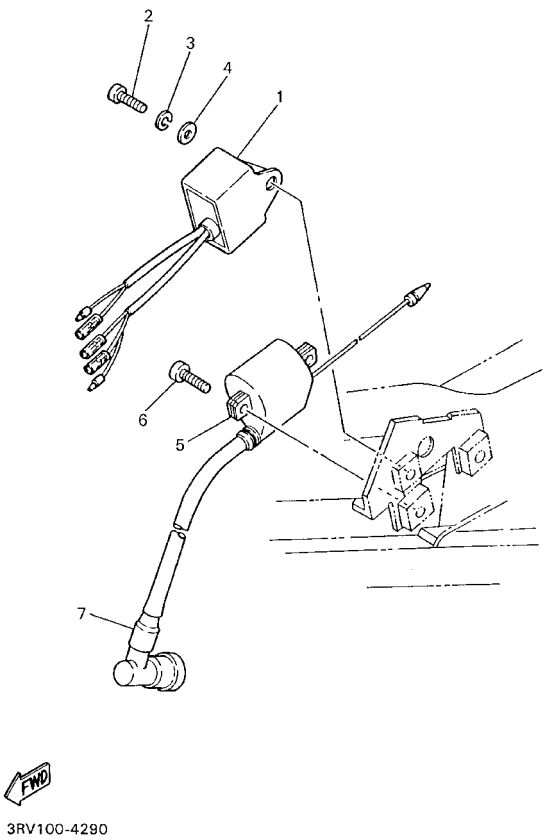

REF. NO.	PART NO.	DESCRIPTION	EUR	ZAF	JPN			REMARKS
1	21W–85540–20	C.D.I. UNIT ASSY	1	1	1			
2	98507–06020	SCREW, PAN HEAD	1	1	1			
3	92907–06100	WASHER, SPRING	1	1	1			
4	92907–06600	WASHER, PLATE	1	1	1			
5	20N–82310–40	IGNITION COIL ASSY	1	1	1			
6	95027–06020	BOLT, FLANGE	2	2	2			
7	166–82370–20	PLUG CAP ASSY	1	1	1			

NUMERICAL INDEX

PART NO.	GRID NO.
3RV–W1441–40	B – 5
3EC–W253A–00	C – 13
4BE–W253E–00	C – 14
21W–11111–00	B – 2
463–11161–01	B – 2
21W–11162–00	B – 2
3E5–11162–00	B – 2
1W7–11181–00	B – 2
3E5–11311–01	B – 2
4AW–11351–00	B – 2
1HA–11400–00	B – 3
1W7–11412–00	B – 3
1HA–11422–00	B – 3
14N–11603–00	B – 3
14N–11604–00	B – 3
14N–11605–00	B – 3
3E5–11631–00–97	B – 3
527–11633–00	B – 3
3E5–11635–00	B – 3
3E5–11636–00	B – 3
1W7–11651–00	B – 3
2Y1–11681–00	B – 3
2T8–13101–00	B – 4
2T5–13124–00	B – 4
384–13138–00	B – 4
296–13147–00	B – 4
384–13161–02	B – 4
384–13174–00	B – 4
53F–13178–00	B – 4
21W–13555–00	B – 5
300–13610–04	B – 5
300–13613–02	B – 5
300–13616–00	B – 5
300–13621–10	B – 5
300–13622–10	B – 5
21W–14101–00	B – 6
12G–14103–00	B – 6
12G–14104–00	B – 6
21W–14107–12	B – 6
296–14112–25	B – 6
296–14131–00	B – 6
127–14135–00	B – 6
127–14141–14	B – 6
193–14142–15	B – 6
127–14143–24	B – 6
127–14143–25	B – 6
127–14143–26	B – 6
1R0–14169–00	B – 6
307–14169–10	B – 6
127–14171–00	B – 6
296–14184–01	B – 6
2E9–14185–00	B – 6
127–14186–00	B – 6
12R–14191–00	B – 6
296–14198–01	B – 6
1V3–14271–00	B – 7
21W–14412–00	B – 5
21W–14451–00	B – 5
21W–14453–00	B – 5
5U8–14454–00	B – 5
21W–14458–00	B – 5
21W–14503–00	B – 6
21W–14610–02	B – 8
3RV–14623–00	B – 8
21W–14708–00	B – 8
4X4–14714–00	B – 8
21W–14753–02	B – 8
21W–14758–00	B – 8
3RV–14766–00	B – 8
21W–1490J–00	B – 6
1M3–14997–00	B – 7
1W7–15111–03	B – 9
1W7–15121–03	B – 9
300–15128–00	B – 9
5T9–15316–01	B – 9
517–15362–02	B – 10
21W–15411–00	B – 10
517–15416–01	B – 9
5R7–15421–00	B – 10
4AW–15451–00	B – 10
21W–15491–01	B – 10
156–15618–01	B – 11
5T9–15620–00	B – 11
384–15635–00	B – 12
2T4–15637–01	B – 12
3E5–15641–00	B – 11
3E5–15660–00	B – 11
3E5–15664–00	B – 11
3E5–15676–00	B – 11
56H–16110–00–30	B – 12
3E5–16150–02	B – 12
122–16164–00	B – 12
517–16180–00	B – 12
132–16346–00	B – 15
527–16520–10	B – 12
3E5–16521–00	B – 12
517–16524–10	B – 12
517–16524–20	B – 12
517–16524–30	B – 12
517–16550–10	B – 12
517–16561–01	B – 12
527–16571–01	B – 12
1W7–17211–12	B – 14
1W7–17221–20	B – 14
21W–17231–00	B – 14
21W–17410–01	B – 14
1W7–17421–10	B – 14
296–17471–00	B – 14
58H–18101–04	C – 2
21W–18111–00	C – 2
132–18113–01	C – 2
278–18127–01	C – 2
296–18140–02	B – 15
1W7–18511–01	B – 15
1W7–18512–02	B – 15
2N8–18531–00	B – 15
21W–18540–01	B – 15
296–18561–00	B – 15
296–18562–01	B – 15
21W–21110–10–33	C – 3
3RV–21511–20	C – 4
3RV–21570–60	C – 4
21W–21621–00	C – 5
21W–21646–00	C – 6
3RV–21711–20	C – 5
21W–21719–00	C – 5
3RV–2173L–40	C – 5
21W–21751–01	C – 6
21W–21766–00	C – 6
5R2–21771–00	C – 6
21W–22110–00–35	C – 7
102–22123–00	C – 7
288–22141–00	C – 7
3R0–22151–00	C – 7
21W–22199–00	C – 7
3RV–22210–11	C – 7
3RV–22210–21	C – 7
3M7–22216–00	C – 7
21W–22311–00	C – 7
3RV–23102–01	C – 9
3RV–23103–01	C – 9
21W–23110–00	C – 9
3M7–23111–01	C – 9
3RV–23126–01	C – 9
3RV–23136–01	C – 9
21W–23141–00	C – 9
3M7–23142–00	C – 10
	C – 9
3M7–23144–00	C – 9
3M7–23145–00	C – 9
2J5–23147–00	C – 9
2J5–23151–00	C – 9
3M7–23156–00	C – 9
2J5–23157–00	C – 9
3R0–23170–00	C – 9
3M7–23181–00	C – 9
3R0–23318–00	C – 10
5HN–23340–00	C – 10
451–23346–00	C – 10
156–2341E–00	C – 8
22F–2341E–00	C – 8
156–23411–00	C – 8
22F–23411–01	C – 8
156–23412–00	C – 8
22F–23412–01	C – 8
122–23416–00	C – 8
3RV–23435–00	C – 8
3RV–23441–01	C – 8
462–23442–00–35	C – 8
164–23462–00	C – 8
21W–23486–00	C – 8
5HN–23492–00	C – 8
3RV–24110–20	C – 11
59V–24173–00	C – 11
21W–24181–00	C – 11
431–24181–00	C – 6
2X6–24183–00	C – 11
3RV–24240–80	C – 11
4X8–24500–02	C – 11
4X8–24512–00	C – 11
3AJ–24523–00	C – 11
3AJ–24534–00	C – 11
2FG–24610–00	C – 11
3RV–24731–40	C – 12
3RV–24734–40	C – 12
3RV–24770–40	C – 12
3R0–25104–00	C – 13
451–25111–00–98	C – 13
2E9–25116–00	C – 13
451–25118–00	C – 13
3R0–25121–00–98	C – 13
451–25155–00	C – 13
5HN–25181–00	C – 13
21W–25304–00	C – 14
21W–25311–00–98	C – 14
102–25315–00	C – 14
1M3–25321–02–98	C – 14
1YT–25351–00	C – 13
3Y6–25351–00	C – 14
538–25355–00	C – 14
21W–25364–00	C – 14
296–25366–01–98	C – 14
21W–25371–00	C – 15
5HN–25381–00	C – 15
21W–25387–00	C – 14
102–25389–00	C – 15
4AW–25412–00	C – 14
21W–25432–10	C – 14
3RV–26111–00	D – 2
21W–26124–00	D – 2
21W–26240–00	D – 2
2N3–26241–00	D – 2
434–26243–12	D – 2
21W–26261–00	D – 2
21W–26262–00	D – 2
21W–26263–00	D – 2
21W–26311–02	D – 2
21W–26312–01	D – 2
21W–26321–02	D – 2
21W–26331–00	D – 2
21W–26341–01	D – 2
21W–27211–00	D – 3
21W–27231–00	D – 3
21W–27311–01	D – 3
21W–27411–01–33	D – 3
214–27413–00	D – 3
214–27421–00	D – 3
4X4–28100–00	C – 6
104–81328–20	D – 4
20N–82310–40	D – 6
166–82370–20	D – 6
4V0–82519–00	D – 5
233–82921–31	D – 5
23X–83922–00	D – 5
437–83936–01	D – 5
437–83936–11	D – 2
	D – 5
21W–83976–00	D – 5
21W–85510–21	D – 4
21W–85512–21	D – 4
21W–85540–20	D – 6
21W–85550–21	D – 4
90101–06278	C – 14
90101–06291	C – 13
90101–06394	B – 9
90101–08286	C – 3
90101–08672	C – 14
90105–10006	C – 8
90105–10147	B – 9
90109–063F6	B – 15
90109–06798	D – 5
90109–08183	C – 15
90109–08368	C – 15
90109–08666	D – 3
90116–07035	B – 2
90119–06044	C – 4
90119–06056	C – 6
90123–08013	D – 2
90149–04135	B – 4
90149–06011	C – 11
90149–06157	B – 9
90150–06032	B – 15
90151–05055	D – 4
90157–05003	B – 8
90159–05028	C – 7
90159–06016	C – 5
90159–06033	C – 4
90167–03004	D – 2
90170–08366	C – 14
90170–10105	B – 4
90175–06013	D – 3
90179–06403	C – 12
90179–07381	B – 2
90179–08148	D – 2
90179–12659	B – 12
90179–16190	B – 13
90179–25051	C – 8
90185–10037	C – 7
90201–06072	C – 11
90201–061A5	C – 15
90201–086P8	C – 3
90201–106H5	C – 7
90201–12190	C – 15
90201–12535	B – 3
90201–12575	C – 2
90201–15701	B – 11
90201–20266	B – 11
90202–05193	C – 11

NUMERICAL INDEX

PART NO.	GRID NO.
90208–12015	B – 12
90208–16019	B – 13
90209–10160	C – 8
90209–12280	B – 12
90209–15178	B – 14
90209–15179	B – 14
90209–15180	B – 14
90209–20159	B – 3
90240–08084	D – 3
90240–10069	C – 7
90240–10072	C – 7
90249–12008	D – 3
90280–03017	B – 3
90282–04064	B – 12
90340–12005	B – 9
90387–07598	C – 11
90387–10744	C – 13
90387–12412	C – 15
90387–20603	B – 3
90387–207G3	C – 14
90401–10029	B – 4
90430–04004	B – 4
90430–10215	B – 9
90430–12227	B – 9
90445–05390	B – 7
90445–07036	B – 7
90445–084J1	C – 11
90445–09082	C – 11
90460–37130	B – 5
90462–14055	C – 8
90467–08003	C – 11
	C – 6
90467–22048	B – 8
90468–02033	B – 4
90468–16090	B – 12
90468–23194	B – 11
90480–10005	B – 4
90480–18290	C – 11
90480–21038	B – 9
90501–10245	D – 3
90501–10602	B – 12
90501–12088	B – 12
90506–08122	C – 2
90506–10002	B – 15
90506–14081	C – 13
90506–15260	C – 14
90506–28100	D – 3
90508–20023	D – 3
90508–26136	B – 11
90508–29578	D – 3
90508–32263	C – 2
90560–10103	C – 13
90560–12145	C – 14
90560–17146	B – 12
91401–20012	D – 3
91401–20015	C – 15
91401–25015	D – 3
91401–25020	C – 7
92901–10100	C – 10
92902–04100	B – 6
	D – 4
92903–06600	C – 8
92907–03100	B – 5
92907–05600	B – 5
92907–06100	C – 11
	C – 15
	C – 8
	D – 5
	D – 6
92907–06600	D – 3
	D – 6
92907–08100	B – 8
	C – 3
	D – 3
92907–08600	B – 5
	B – 8
	C – 15
	D – 3
92907–10100	C – 8
92907–10200	C – 13
92907–12600	D – 3
93101–10001	B – 4
93101–12004	C – 2
93102–20143	B – 14
93103–25098	B – 3
93103–32099	B – 3
93104–11053	B – 10
93106–17006	C – 13
93106–30004	C – 14
93109–15001	B – 11
93210–09729	B – 15
93210–18023	B – 3
93210–19123	B – 10
93210–26240	B – 4
93210–29282	B – 4
93210–41041	C – 14
93210–98202	B – 12
93306–00406	C – 14
93306–20004	C – 13
93306–20009	C – 13
93306–20301	B – 14
93306–20401	B – 14
93306–20517	B – 3
93306–30111	C – 14
93310–11268	B – 3
93310–420F2	B – 3
93315–23208	B – 15
93320–41202	B – 14
93410–20038	B – 14
93430–07012	B – 4
93430–09019	B – 15
93440–15012	B – 14
93450–13022	B – 3
93450–28049	B – 14
93451–08094	B – 12
93505–08030	B – 12
93509–32012	B – 14
93603–14026	B – 4
93604–22050	B – 15
93606–14081	B – 15
93812–15063	B – 14
94125–141A6	C – 13
94130–121A7	C – 14
94225–14215	C – 13
94227–12216	C – 14
94325–14129	C – 13
94330–12130	C – 14
94414–14227	C – 13
94416–12002	C – 14
94580–52084	C – 15
94680–52001	C – 15
94701–00198	B – 2
94703–00198	B – 2
95027–06020	D – 6
95307–06600	C – 13
	C – 14
	C – 15
95307–08700	C – 15
	D – 3
95307–10600	C – 8
95337–12600	B – 3
95607–06100	D – 5
95607–10200	C – 13
95607–12100	C – 15
95707–08500	C – 15
	C – 3
95827–08120	C – 3
97007–06022	D – 5
97007–08016	B – 5
	B – 8
97007–08020	B – 8
97014–06035	C – 8
97017–06025	B – 11
97027–06020	C – 2
97027–06030	C – 11
97027–08020	D – 3
97801–03008	C – 11
98502–04008	D – 4
98502–04010	B – 6
98502–04018	B – 6
98502–04025	D – 4
98502–05030	B – 6
98507–03008	B – 5
98507–05020	B – 4
98507–05025	B – 5
98507–05035	B – 4
98507–05050	B – 5
98507–06012	B – 10
	B – 14
	C – 8
98507–06020	D – 6
98507–06030	B – 5
98507–06035	B – 10
	B – 9
98507–06040	B – 10
98507–06045	B – 10
	B – 9
98507–06050	B – 9
98507–06100	B – 10
98507–08010	B – 9
98802–05100	B – 6
99001–03600	B – 12
99001–09600	D – 3
99001–10600	B – 15
	C – 2
99009–17400	B – 11
99009–20400	B – 11
99530–10114	B – 10
99530–12016	B – 9

CONTENTS

ENGINE

CYLINDER B2
CRANKSHAFT. PISTON B3
OIL PUMP B4
INTAKE B5
CARBURETOR B6
EXHAUST B8
CRANKCASE B9
CRANKCASE COVER 1 . . . . . B10
STARTER B11
CLUTCH B12
TRANSMISSION B14
SHIFT CAM. FORK B15
SHIFT SHAFT C2

CHASSIS

FRAME C3
FRONT FENDER C4
SIDE COVER C5
OIL TANK C6
REAR ARM. SUSPENSION C7
STEERING C8
FRONT FORK C9
FUEL TANK C11
SEAT C12
FRONT WHEEL C13
REAR WHEEL C14
STEERING HANDLE. CABLE D2
STAND. FOOTREST D3
GENERATOR D4
HANDLE SWITCH. LEVER D5
ELECTRICAL 1 . . . . . D6

INDEX

NUMERICAL INDEX M1